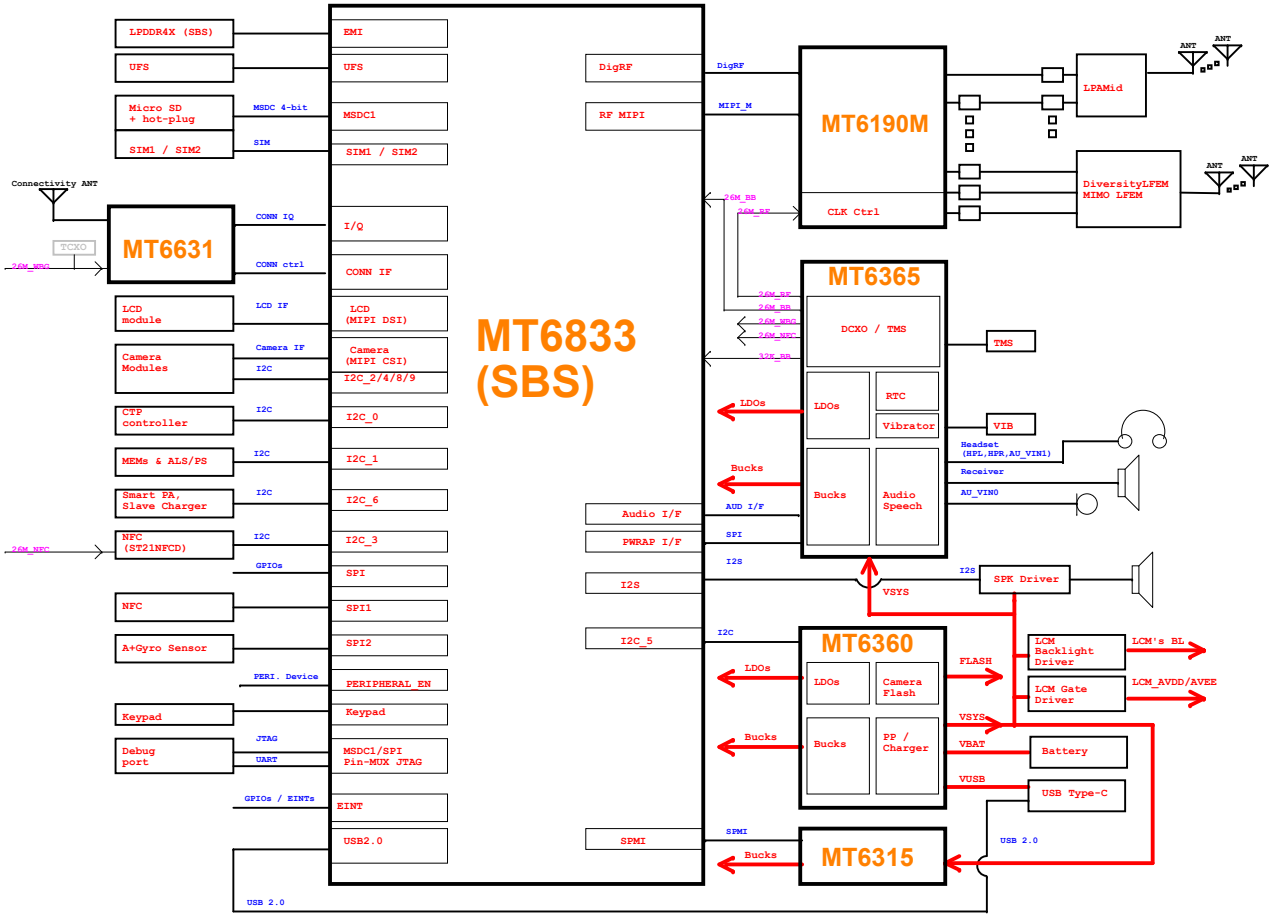

华勤通讯 Huaqin Telecom Technology Com.,Ltd		
Title	Block Diagram	
Size D	Project <Doc>	Rev V1
Date: Tuesday, January 12, 2021	Sheet 1 of 48	

Date	Version	Page	Change notice
2020.06.xx	Pre-Released		
2020.07.xx	V01		
2020.08.14	V02	13_BB_1	Disconnect Dummy pins A1,A34,AP1,AP34 to GND
		29_POWER_EXT	Change C2923 cap from 6.3V to 10V
		20_POWER_MT6365_Buck	[PDN] Change Caps of DVDD_GPU - C2039/C2038 to NC
		25_POWER_MT6315_VMD	[PDN] Change Caps of DVDD_MODEM - C2502/C2534/C2523/C2522 to NC
2020.08.26	V03	File name	Modify the file name

华勤通讯 Huaqin Telecom Technology Com.,Ltd		
Title SM6350_Control		
Size D	Project <Doc>	Rev V1
Date: Tuesday, January 12, 2021	Sheet 2 of 48	

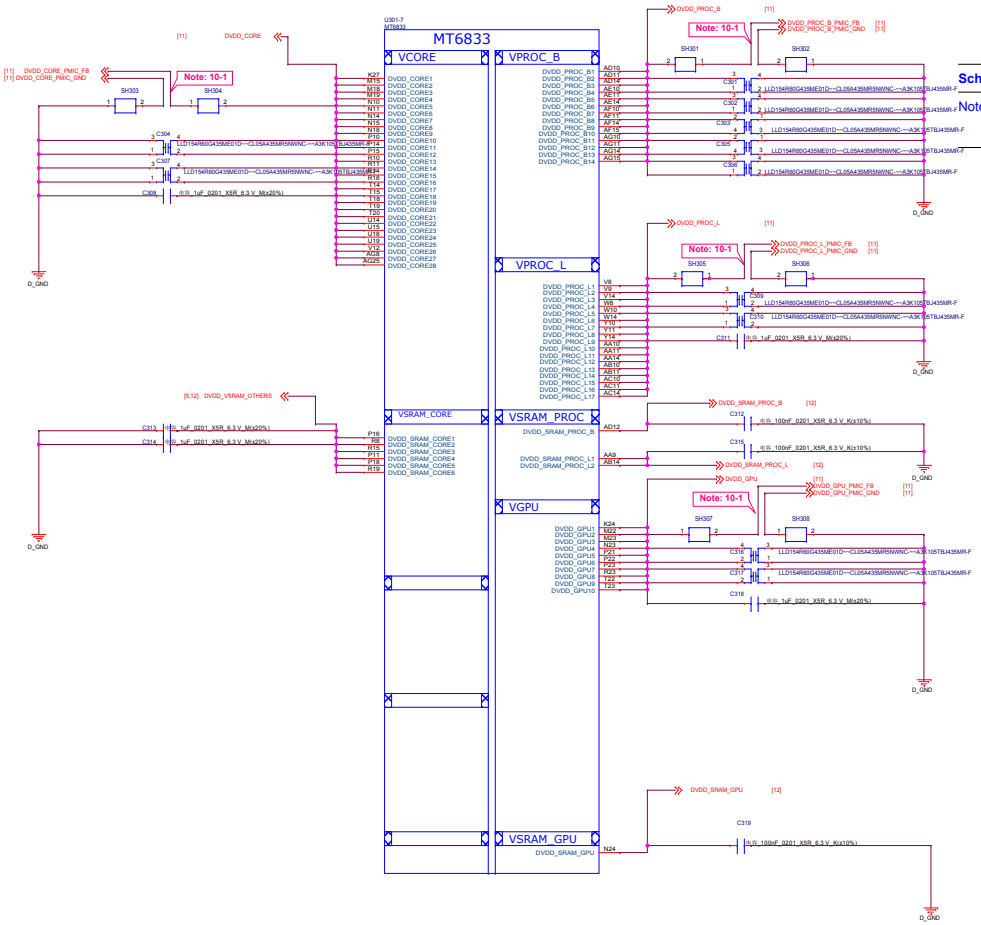

Schematic design notice of "10_BB_POWER_PDN" page.

Note 10-1: Differential pair of PMIC remote sense must be close to BB's ball.

Remote sense trace with GND shielding to PMIC (Differential)

华勤通讯 Huaqin Telecom Technology Com.,Ltd		
Title	03.BB_POWER_PDN1	
Size D	Project <Doc>	Rev V1
Date: Tuesday, January 12, 2021	Sheet 3 of 48	

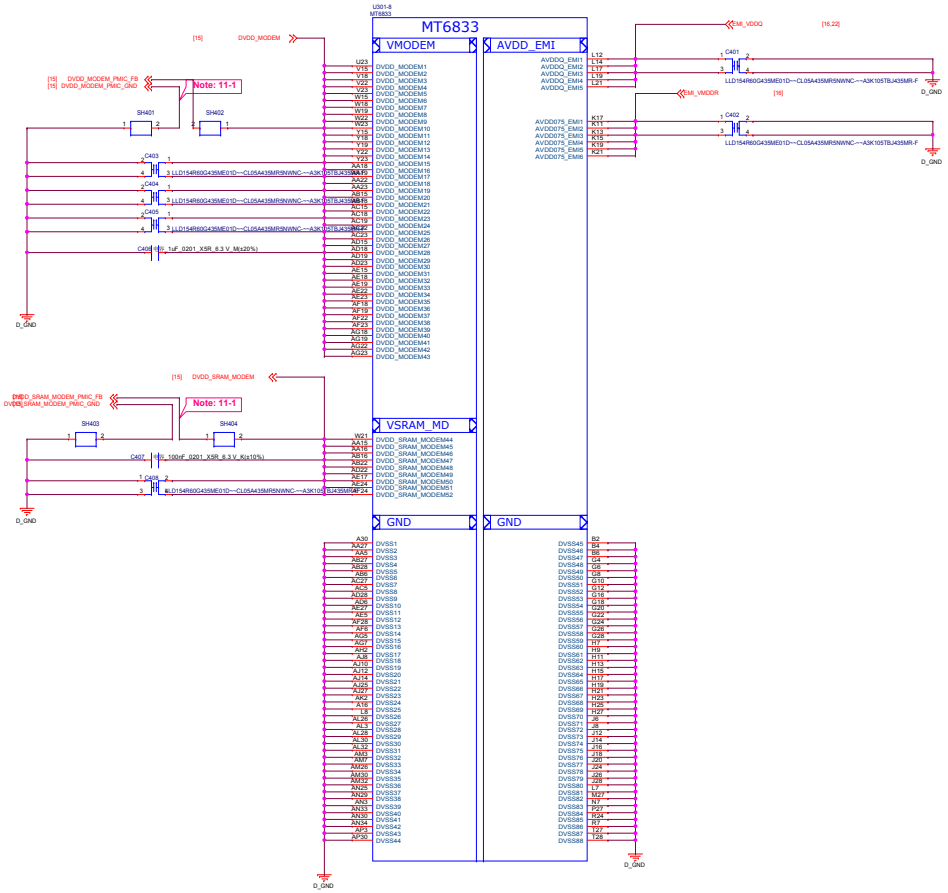

Schematic design notice of "11_BB_POWER_PDN" page.

Note 11-1: Differential pair of PMIC remote sense must be close to BB's ball.
Remote sense trace with GND shielding to PMIC (Differential)

华勤通讯 Huaqin Telecom Technology Com.,Ltd		
Title 04.BB_POWER_PDN2		
Size D	Project <Doc>	Rev V1
Date: Tuesday, January 12, 2021	Sheet 4 of 48	

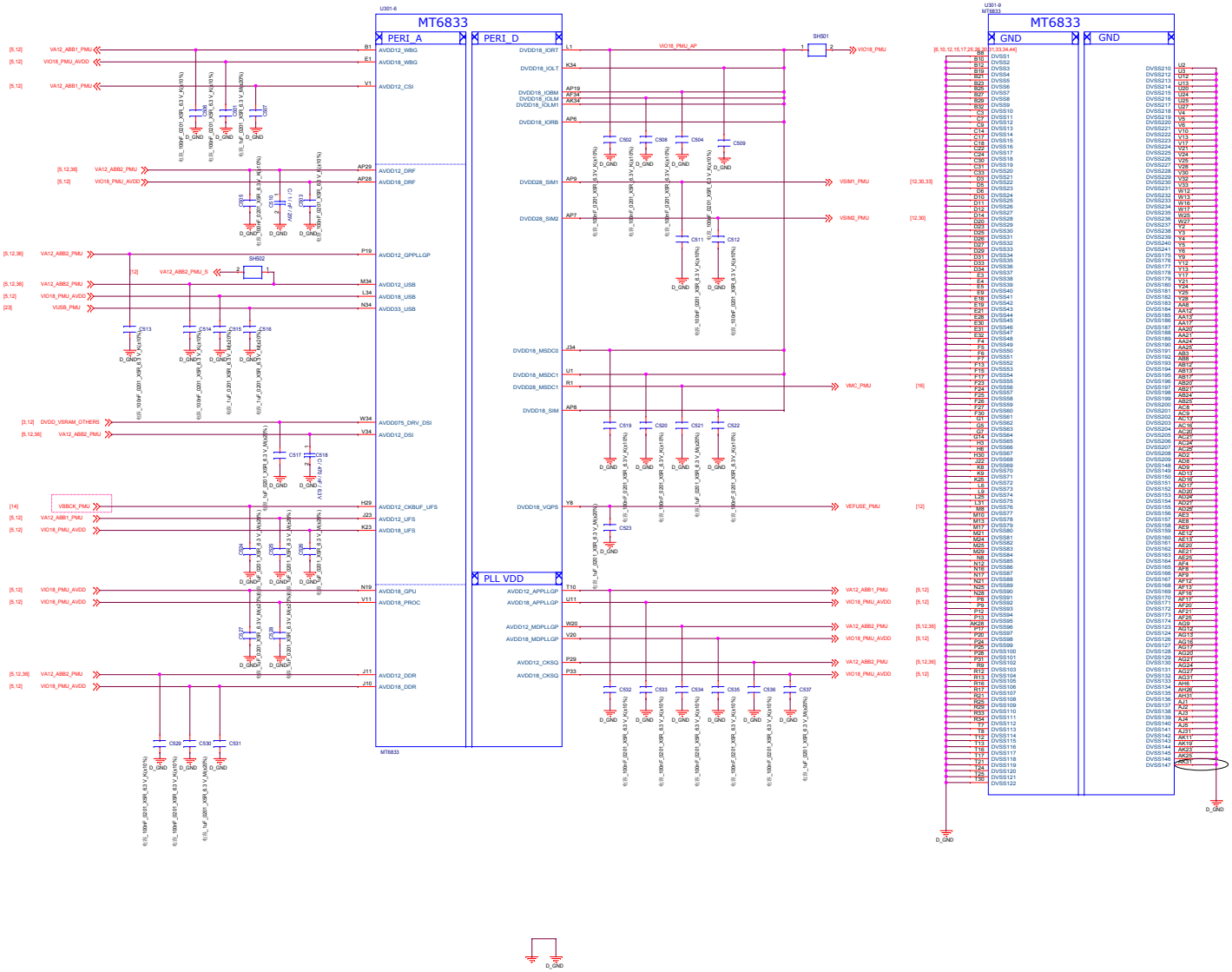

华勤通讯 Huaqin Telecom Technology Com.,Ltd		
Title	05.BB_POWER_IO	
Size D	Project <Doc>	Rev V1
Date: Tuesday, January 12, 2021	Sheet 5 of 48	

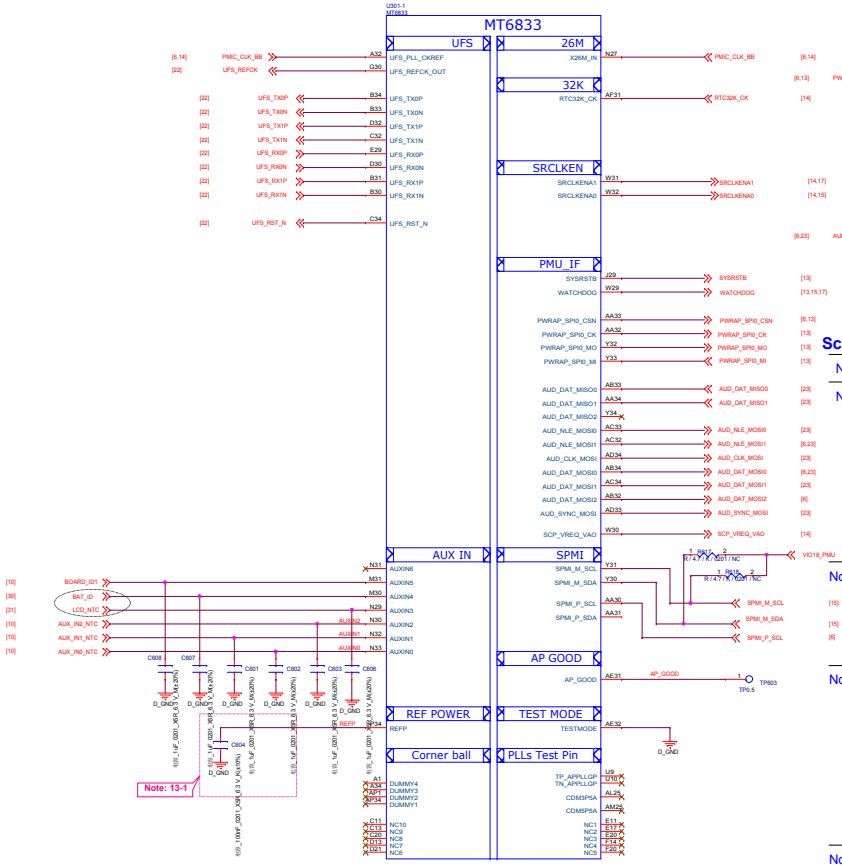

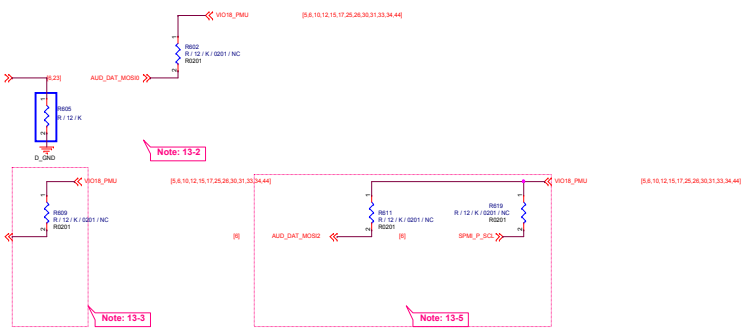

Schematic design notice:

Note 13-1: The load cap. have to be placed as close to REFP ball as possible.

Note 13-2: "PWRAP_SPI0_CSN" and "AUD_DAT_MOS0"I pin features in trapping pin to enable JTAG.

PWRAP_SPI0_CSN	AUD_DAT_MOSI0	AP JTAG	IO JTAG
H (Default)	L (Default)	N/A	N/A
H	H (by external PU)	SPI0+EINT8	N/A
L (by external PD)	L	SPI0+EINT8	EINT16/EINT17/EINT18/EINT19/EINT20 EINT21/EINT22/I2C7
L (by external PD)	H (by external PU)	MSDC1_CLK, MSDC1_CMD, MSDC1_DAT0, MSDC1_DAT1, MSDC1_DAT2	N/A

Note 13-3: "AUD_NLE_MOSI1" features in trapping pin to enable JTAG over USB 2.0 port.

AUD_NLE_MOSI1	USB JTAG
L (Default)	Disable serial JTAG over USB
H (by external PU)	DP/DM output JTAG

Note 13-4: "AUD_SYNC_MOSI" and "AUD_NLE_MOSI0" pin features in trapping pin to booting (eMMC/UFS/SPI NOR).

AUD_SYNC_MOSI	AUD_NLE_MOSI0	Storage Booting
L (Default)	L (Default)	Only UFS boot
L	H (by external PU)	Only eMMC boot
H (by external PU)	L	Reserved
H (by external PU)	H (by external PU)	Reserved

Note 13-5: "AUD_DAT_MOSI1" and "AUD_DAT_MOSI2" pin features in trapping pin to enable DDR.

AUD_DAT_MOSI1	AUD_DAT_MOSI2	SPMI_P_SCL	DDR
L (Default)	L (Default)	L (Default)	LP4x-MCP-4266Mbps
L	H (by external PU)	L (Default)	LP4x-Discrete-4266Mbps
H (by external PU)	L	L (Default)	Reserved
H (by external PU)	H (by external PU)	L (Default)	Reserved

Note : SPMI_P_SCL for DDR 4266Mbps/3733Mbps Co-load, 'L' = 4266Mbps, 'H(by external PU)' = 3733Mbps

Note 13-6: "AUD_DAT_MISO1" is trapping pin to select VEMC Voltage.

AUD_DAT_MISO1	VEMC Voltage
L (Default)	VEMC=3.0V for VCC of UFS2.* device
H (by external PU)	VEMC=2.5V for VCC of UFS3.0 device

华勤通讯 Huaqin Telecom Technology Com.,Ltd		
Title 06.BB_1		
Size D	Project <Doc>	Rev V1
Date: Tuesday, January 12, 2021	Sheet 6 of 48	

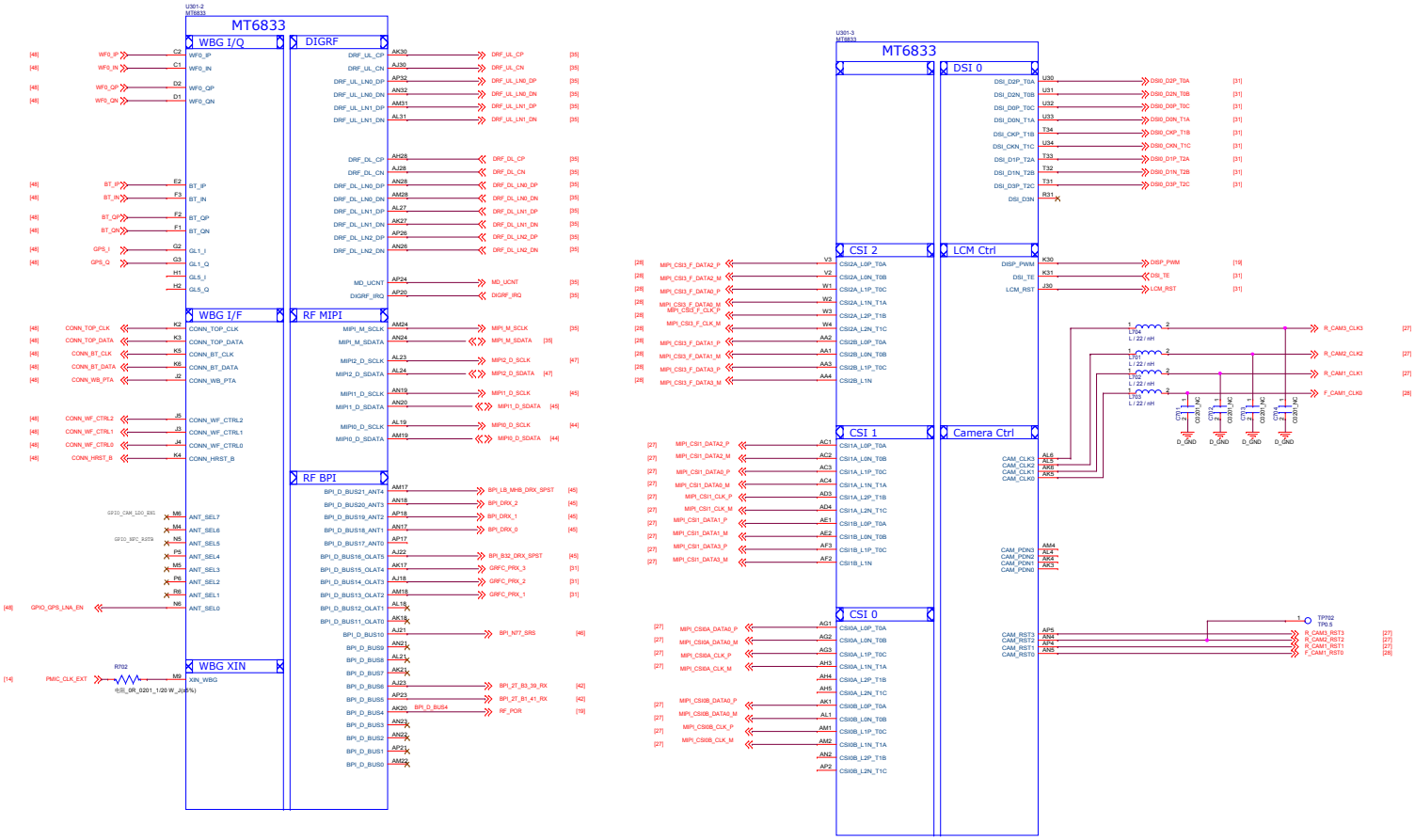

华勤通讯 Huaqin Telecom Technology Com.,Ltd		
Title 07.BB_2		
Size D	Project <Doc>	Rev V1
Date: Tuesday, January 12, 2021	Sheet 7 of 48	

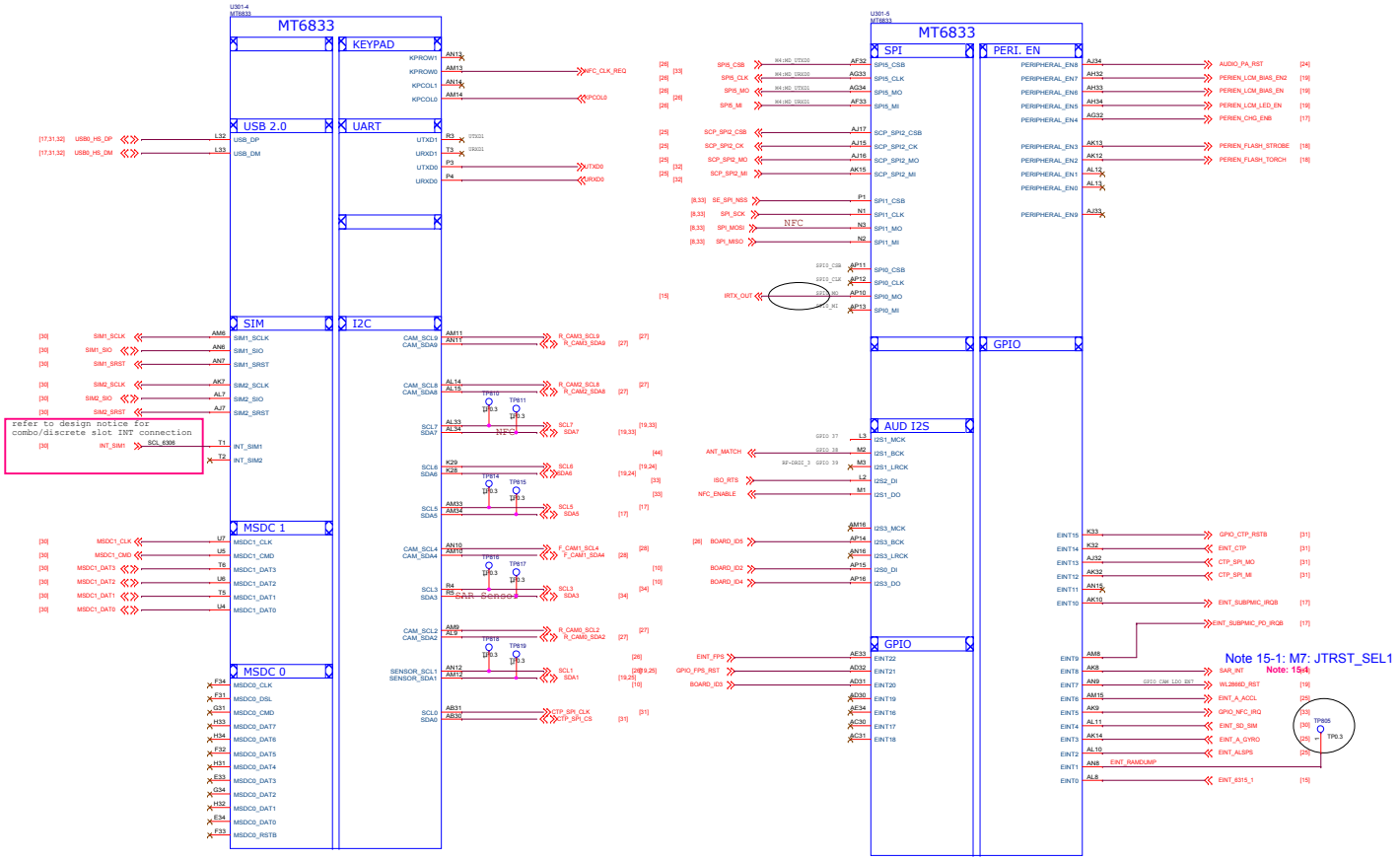

华勤通讯 Huaqin Telecom Technology Com.,Ltd		
Title 08.BB_3		
Size D	Project <Doc>	Rev V1
Date: Tuesday, January 12, 2021	Sheet 8 of 48	

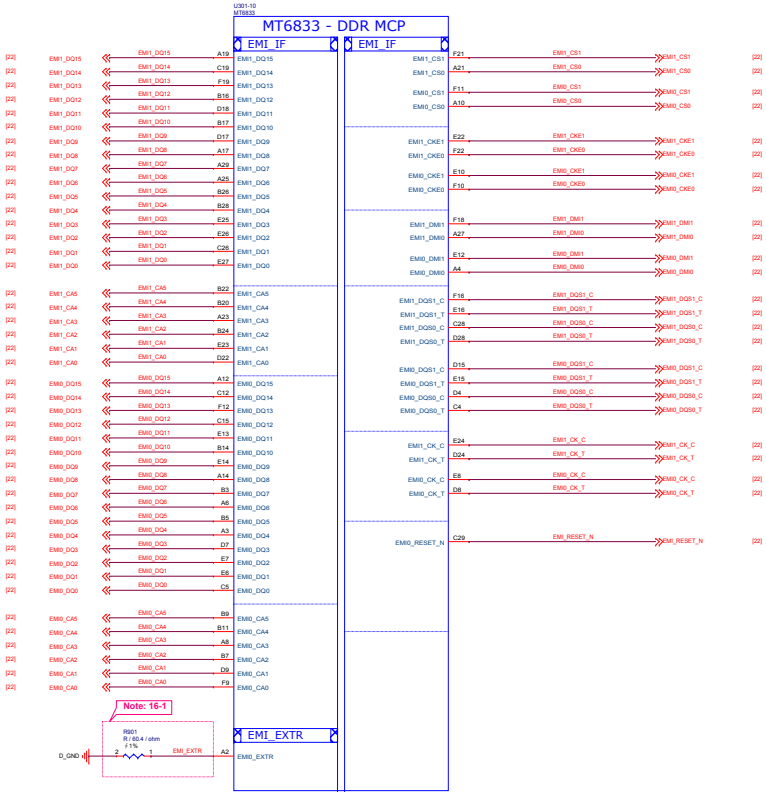

Schematic design notice of "16_BB_4_Interface" page:

Note 16-1: R4001 please select 60.4 ohm (1%) resistor

华勤通讯 Huaqin Telecom Technology Com.,Ltd		
Title 09.BB_4		
Size D	Project <Doc>	Rev V1
Date: Tuesday, January 12, 2021	Sheet 9 of 48	

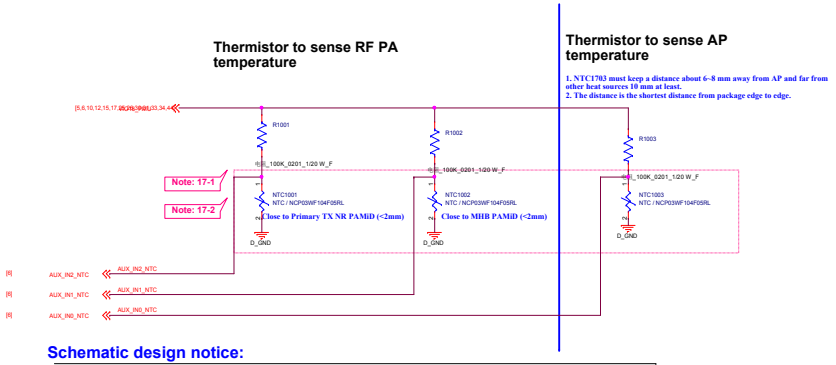

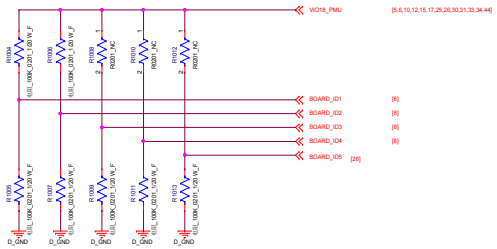

Schematic design notice:

Note 17-1: SW Default Configuration is as followings
AUX_IN0_NTC is for AP Temp.
AUX_IN1_NTC is for MHB PAMiD Temp.
AUX_IN2_NTC is for NR PAMiD Temp.

Note 17-2: If your design or placement is different with SW Default Config.
Please refer to "MTXXXX Thermal User Manuel.docx" and modify SW setting.

华勤通讯 Huaqin Telecom Technology Com.,Ltd		
Title 10.BB_AUXADC_Thermal/BOARD_ID		
Size D	Project <Doc>	Rev V1
Date: Tuesday, January 12, 2021	Sheet 10 of 48	

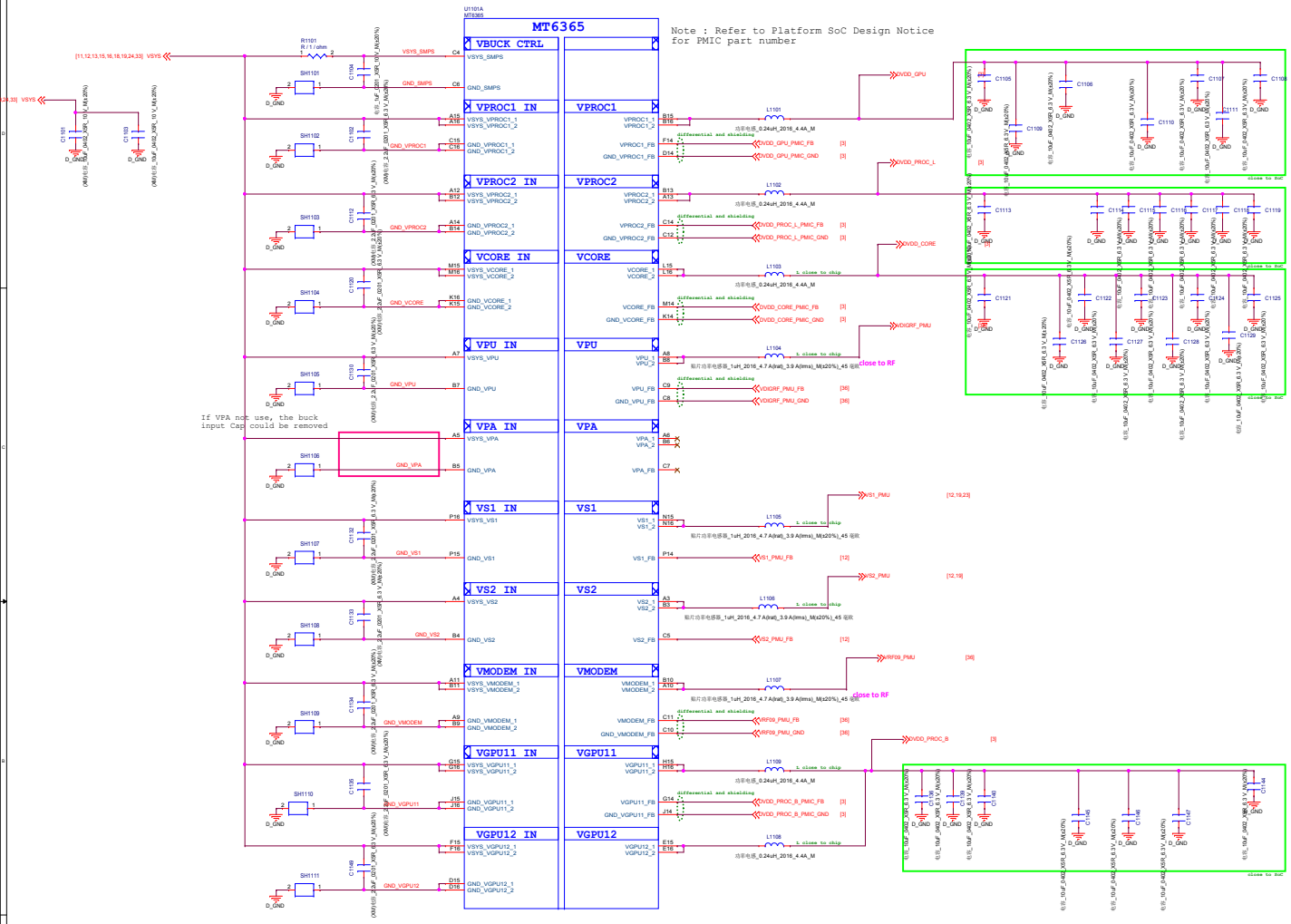

Circuit Type	Buck Name (Application name)	Output Voltage Range (V)	Boot Default (V)	$I_{OUT-MAX}$ (mA)
Buck	VPROC1 (DVDD_GPU)	0.40 ~ 1.19 (6.25mV/step)	ON (0.75)	4800
	VPROC2 (DVDD_PROC_L)	0.40 ~ 1.19 (6.25mV/step)	ON (0.75)	4800
	VGPU11+12 (DVDD_PROC_B)	0.40 ~ 1.19 (6.25mV/step)	ON (0.75)	4800 *2
	VCORE (DVDD_CORE)	0.40 ~ 1.3 (6.25mV/step)	ON (0.75)	4800
	VMODEM (VRF09_PMU)	0.50 ~ 1.10 (6.25mV/step)	OFF	4800
	VPU (VDIGRF_PMU)	0.40 ~ 1.19 (12.5mV/step)	ON (0.7)	2400
	VS1 (VS1_PMU)	1.86 ~ 2.20 (12.5mV/step)	ON (2.0)	2200
	VS2 (VS2_PMU)	1.20 ~ 1.50 (12.5mV/step)	ON (1.35)	2500
	VPA (VPA_PMU)	0.50 ~ 3.40 (50mV/step)	OFF	1000

华勤通讯 Huaqin Telecom Technology Com.,Ltd		
Title	11.POWER_MT6365_Buck	
Size D	Project <Doc>	Rev V1
Date: Tuesday, January 19, 2021	Sheet 11 of 48	

Note : Refer to Platform SoC Design Notice
for PMIC part number

1. "Typical Cap" defined in design notice is the minimum cap. to LDO Cout.
2. NC cap can move to application, if (PCB L<20nH, PCB R<0.2mohm)
=> value and placement of Cap, please refer design notice

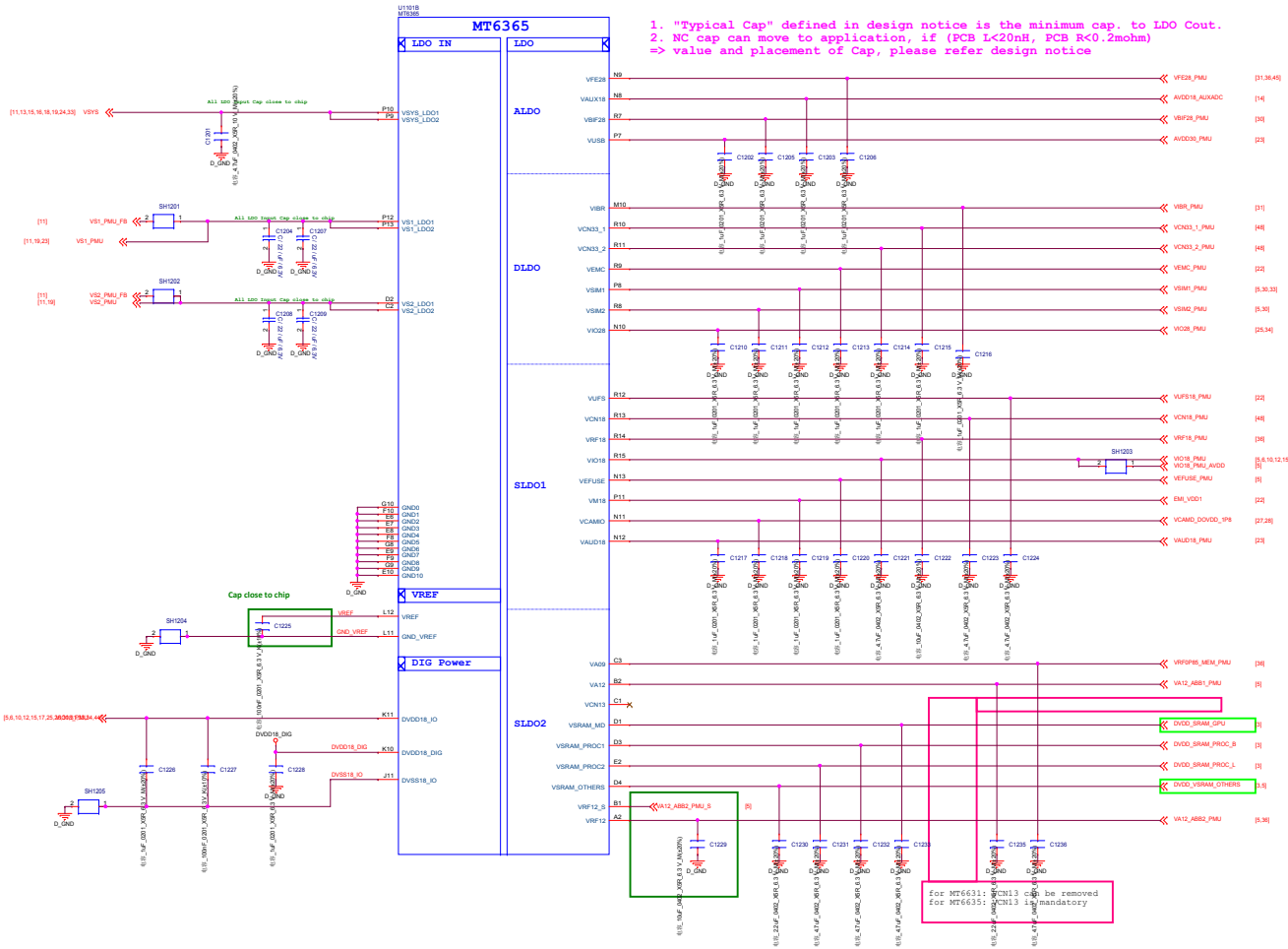

Circuit Type	LDO Name	Output Voltage (V)	Boot Default (V)	$I_{OUT-MAX}$ (mA)	Expected use
ALDO	VFE28	2.80	OFF (2.8)	200	RFFE
	VUSB	3.07	ON (3.07)	200	USB
	VAUX18	1.84	ON (1.84)	50	AUXADC
	VXO22	2.24	ON (2.24)	25	DCXO
	VBIF28	2.80	OFF (2.8)	50	Battery Interface
VRTC	VRTC	2.80	ON (2.8)	2	RTC
VDIG	DVDD18_DIG	1.80	ON (1.8)	10	PMIC Digital

Circuit Type	LDO Name	Output Voltage (V)	Boot Default (V)	$I_{OUT-MAX}$ (mA)	Expected use
DLDO	VSIM1	1.7/1.8/1.86/ 2.76/3.0/3.1	OFF (1.86)	200	SIM
	VSIM2	1.7/1.8/1.86/ 2.76/3.0/3.1	OFF (1.86)	200	SIM
	VCN33_1	3.3/3.4/3.5/3.6	OFF (3.3)	800	Connectivity
	VCN33_2	3.3/3.4/3.5/3.6	OFF (3.3)	800	Connectivity
	VEMC	2.55/2.9/3.0/3.3	ON (3.0)	800	eMMC / UFS
	VIO28	2.8/2.9/3.0/ 3.1/3.2/3.3	OFF (2.8)	200	IO & Sensor
	VIBR	2.7/2.8/3.3/3.3	OFF (2.8)	200	Vibrator

Circuit Type	LDO Name	Output Voltage (V)	Boot Default (V)	$I_{OUT-MAX}$ (mA)	Expected use
SLDO1	VEFUSE	1.80	OFF (1.8)	300	EFUSE
	VAUD18	1.80	ON (1.8)	300	Audio
	VCAMIO	1.80	OFF (1.8)	300	Camera IO
	VM18	1.80	ON (1.8)	300	DRAM
	VRF18	1.80	OFF (1.8)	450	RF
	VIO18	1.80	ON (1.8)	600	IO & Sensor
	VCN18	1.80	OFF (1.8)	1200	Connectivity
	VUFS	1.86	ON (1.86)	1200	eMMC / UFS
DCXO LDO	VRFCK	1.40 @ boot 1.60 @ work	ON (1.4)	10	DCXO
	VBBCK	1.24	ON (1.24)	10	DCXO

Circuit Type	LDO Name	Output Voltage (V)	Boot Default (V)	$I_{OUT-MAX}$ (mA)	Expected use
SLDO2	VA09	0.85	ON (0.85)	300	DIGRF SRAM (VRF0P85_MEM_PMU)
	VA12	1.2	ON (1.2)	300	AP Analog Module
	VCN13	1.3	OFF (1.3)	350	Connectivity
	VSRAM_PROC1	0.60 ~ 1.2 (6.25mV/step)	ON (0.85)	600	CPUB SRAM
	VSRAM_PROC2	0.60 ~1.2 (6.25mV/step)	ON (0.85)	600	CPUL SRAM
	VSRAM_OTHERS	0.60 ~ 1.2 (6.25mV/step)	ON (0.75)	600	OTHERS SRAM
	VSRAM_MD	0.60 ~ 1.2 (6.25mV/step)	ON (0.85)	600	GPU SRAM
	VRF12	1.2	ON (1.2)	800	AP Analog Module

Huaqin Telecom Technology Com.,Ltd

华勤通讯 Huaqin Telecom Technology Com.,Ltd		
Title	12.POWER_MT6365_LDO	
Size D	Project <Doc>	Rev V1
Date: Tuesday, January 12, 2021	Sheet 12 of 48	

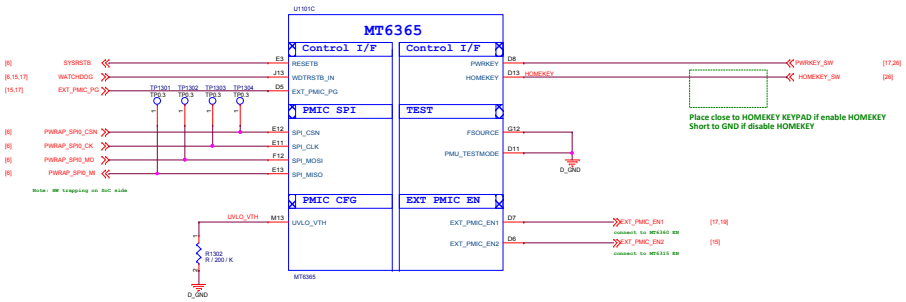

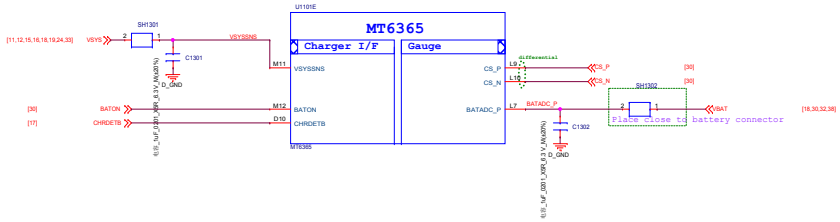

华勤通讯 Huaqin Telecom Technology Com.,Ltd		
Title	13.POWER_MT6365_General	
Size D	Project <Doc>	Rev V1
Date: Tuesday, January 12, 2021	Sheet 13 of 48	

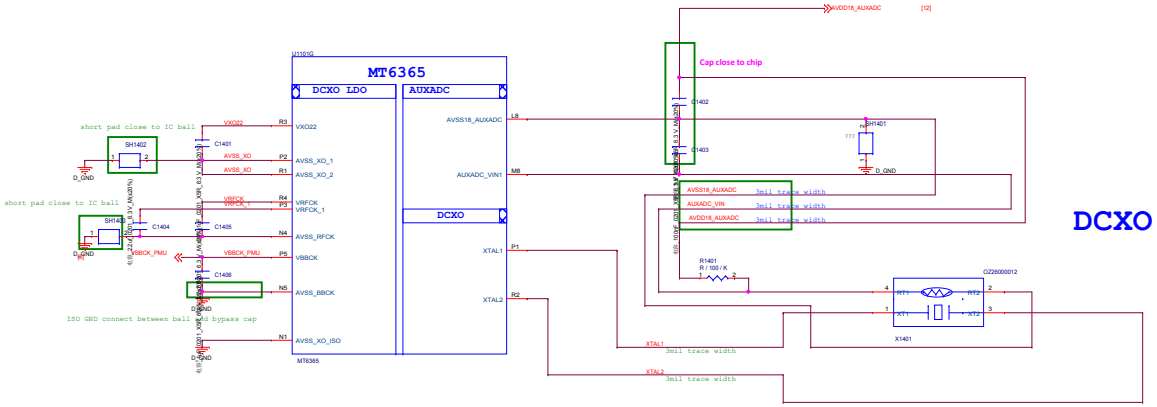

Route XTAL1/ XTAL2/ AVDD18_AUXADC/ AUXADC_VIN/ AVSS18_AUXADC with 3mils width traces and well GND shielding.

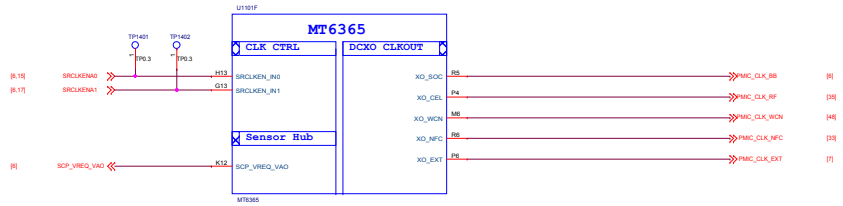

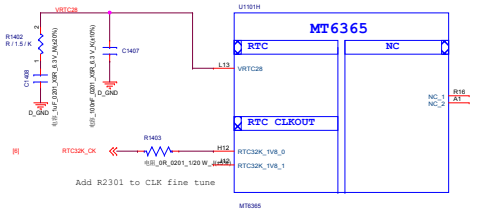

华勤通讯 Huaqin Telecom Technology Com.,Ltd		
Title	14.POWER_MT6365_Clock	
Size D	Project <Doc>	Rev V1
Date: Tuesday, January 12, 2021	Sheet 14 of 48	

MT6315 4-Phase Buck (MD)

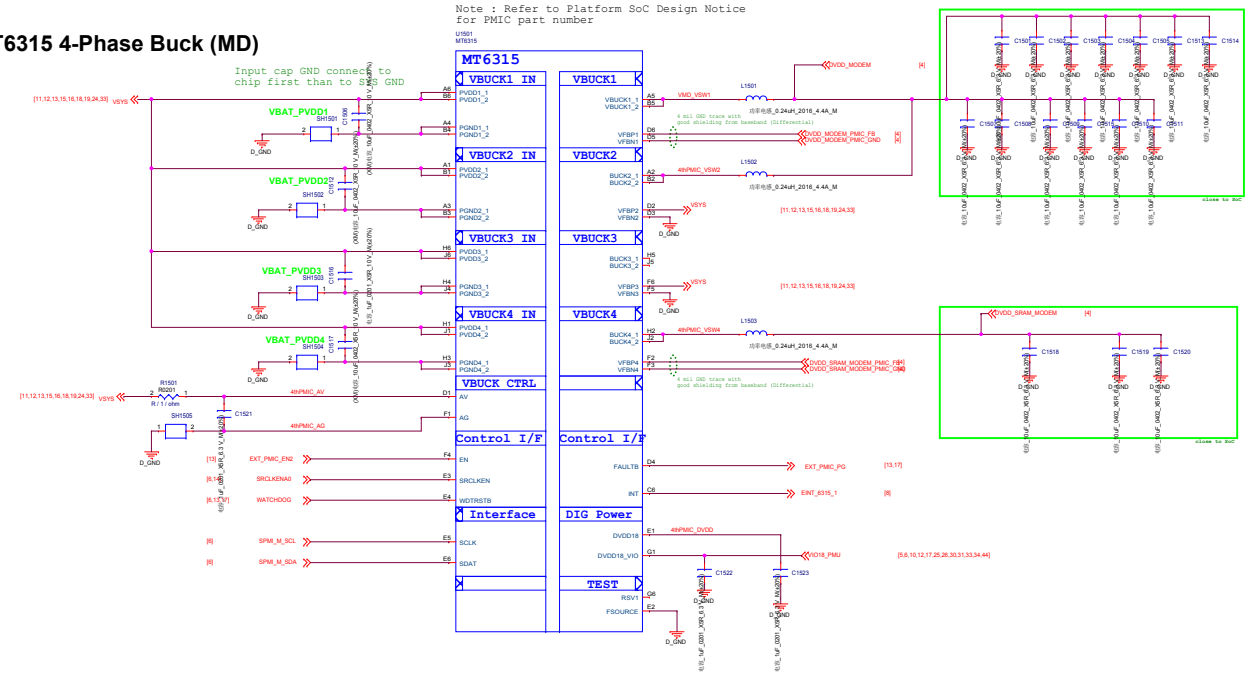

MT6315NP/B	Output Voltage Range (V)	Boot Default (V)	$I_{OUT-MAX}$ (mA)	Expected use
BUCK1+2	0.40 ~ 1.19375 (6.25mV/step)	ON (0.825)	5000*2	DVDD_MODEM
BUCK3	0.40 ~ 1.19375 (6.25mV/step)	ON (0.75)	5000	--
BUCK4	0.40 ~ 1.19375 (6.25mV/step)	ON (0.825)	5000	DVDD_SRAM_MODEM

IR LED

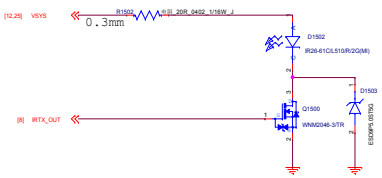

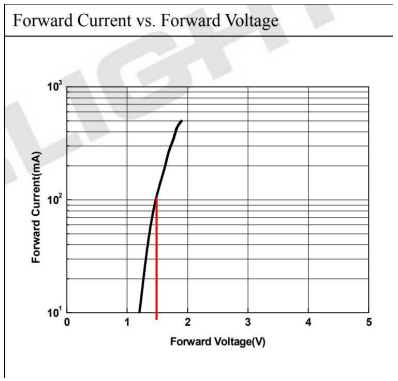

华勤通讯 Huaqin Telecom Technology Com.,Ltd		
Title 15.POWER_MT6315_VMD/IR_LED		
Size D	Project <Doc>	Rev V1
Date: Tuesday, January 12, 2021	Sheet 15 of 48	

Note : Refer to Platform SoC Design Notice
for PMIC part number

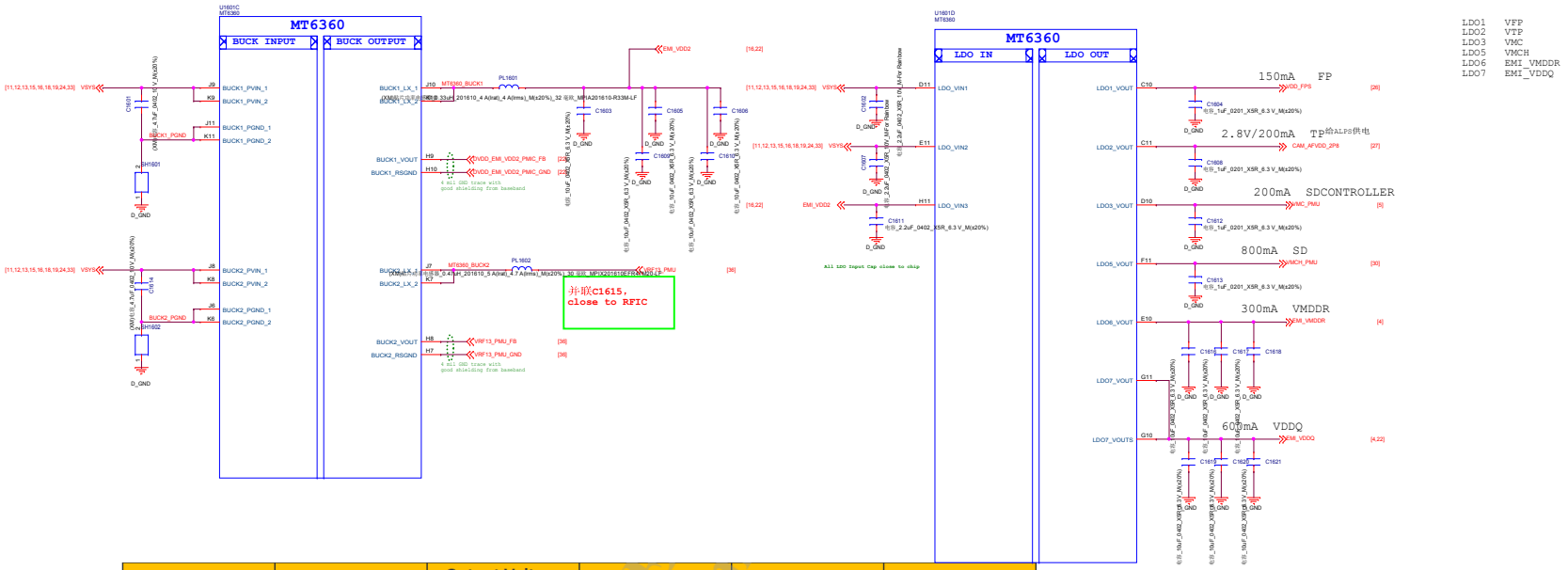

Circuit Type	Name	Output Voltage Range (V)	Boot Default (V)	$I_{OUT-MAX}$ (mA)	Expected use
Buck	BUCK1	0.3 ~ 1.3 (5mV/step)	ON (1.125)	3000	EMI_VDD2
	BUCK2	0.3 ~ 1.3 (5mV/step)	OFF (1.3)	3000	VRF13_PMU

Circuit Type	Name	Output Voltage (V)	Boot Default (V)	$I_{OUT-MAX}$ (mA)	Expected use
LDO	LDO1	1.8/2.0/2.1/2.5/2.7/2.8/2.9/3.0/3.1/3.3	OFF (1.8)	150	Fingerprint
	LDO2	1.8/2.0/2.1/2.5/2.7/2.8/2.9/3.0/3.1/3.3	OFF (1.8)	200	Touch Panel
	LDO3	1.8/2.9/2.8/3.0/3.3	OFF (3.0)	200	SD Card
	LDO5	2.9/3.0/3.3	OFF (3.0)	800	SD Card
	LDO6	0.75	ON (0.75)	300	EMI_VMDDR
	LDO7	0.6	ON (0.6)	600	EMI_VDDQ

MEDIATEK CONFIDENTIAL
Zhenhua@huaqin.com

华勤通讯 Huaqin Telecom Technology Com.,Ltd

Title	16.POWER_MT6360_BUCK_LDO*	
Size D	Project <Doc>	Rev V1
Date: Tuesday, January 12, 2021	Sheet 16 of 48	

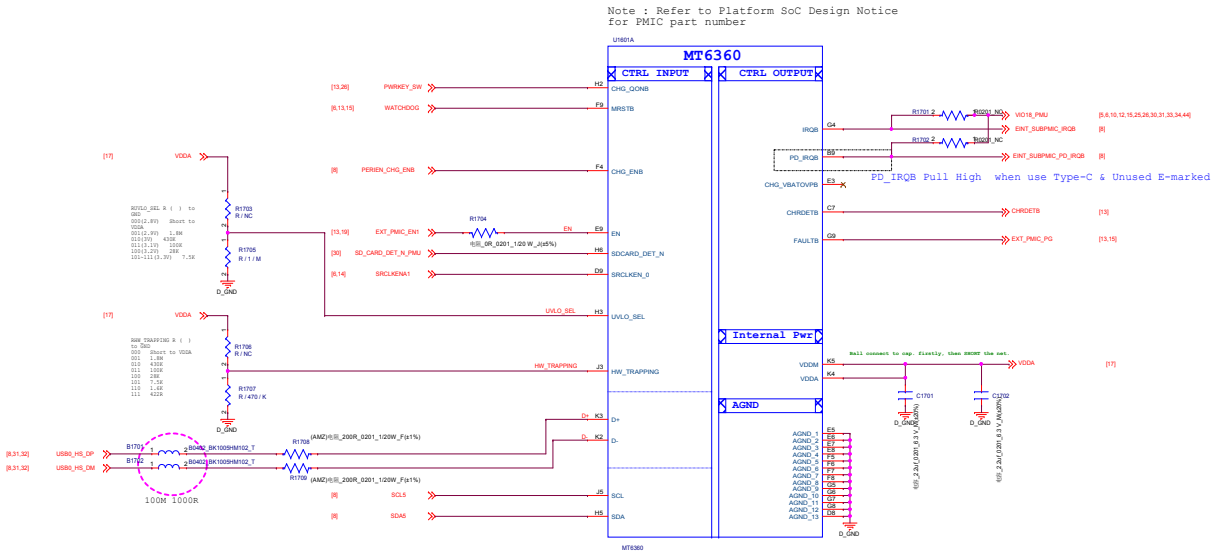

华勤通讯 Huaqin Telecom Technology Com.,Ltd		
Title 17.POWER_MT6360_General		
Size D	Project <Doc>	Rev V1
Date: Tuesday, January 12, 2021	Sheet 17 of 48	

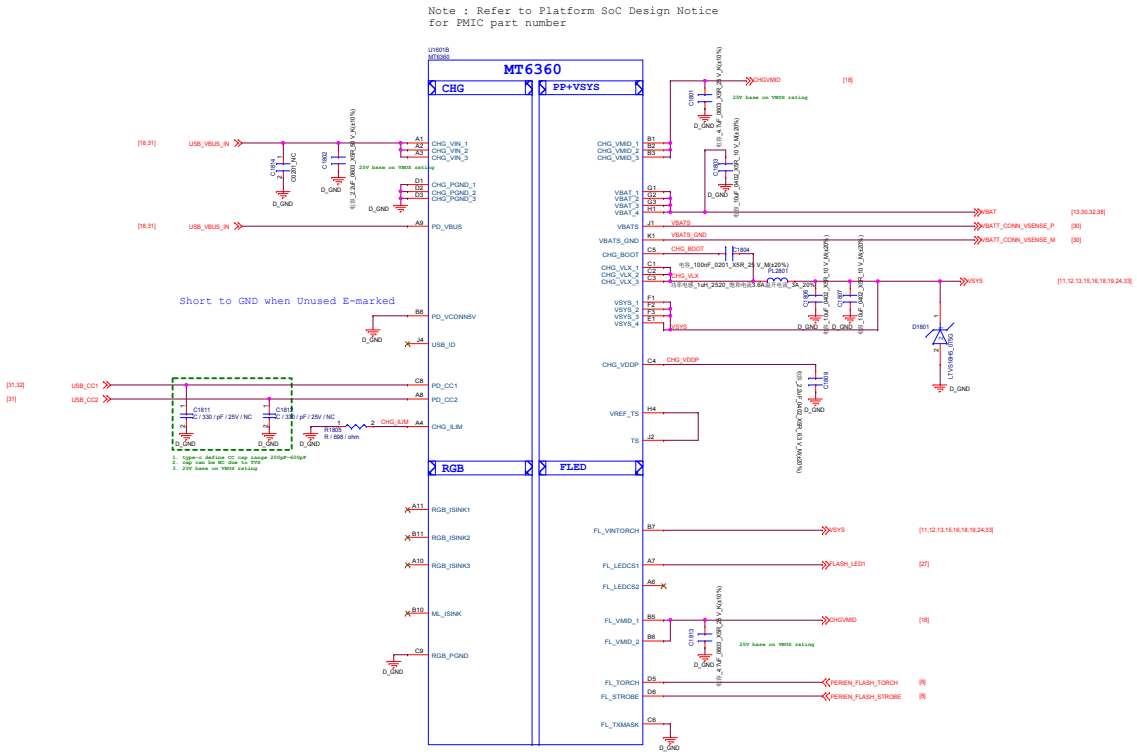

Schematic design notice of "28_POWER_MT6360_Charger" page.

Note 28-1: For better ESD & surge performance we need choose suitable device for system protection. Please refer to the latest version of [Surge device selection guide] provided by MTK.

华勤通讯 Huaqin Telecom Technology Com.,Ltd		
Title	18.POWER_MT6360_Charger	
Size D	Project <Doc>	Rev V1
Date: Tuesday, January 12, 2021	Sheet 18 of 48	

LCM Backlight LED Driver

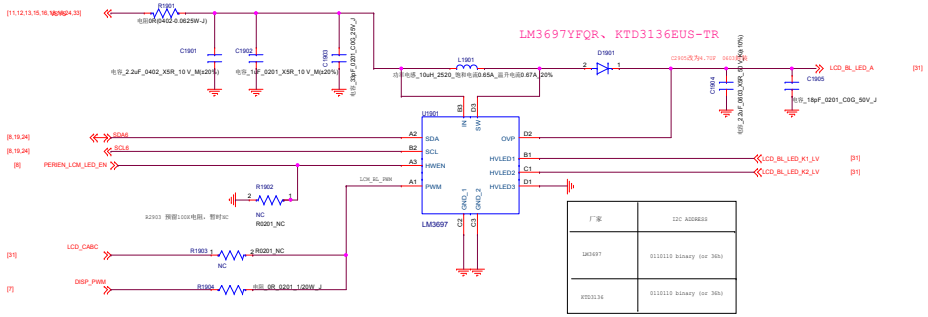

厂家	I2C ADDRESS
LM3697	0110110 binary (or 36h)
KTD3136	0110110 binary (or 36h)

厂家	I2C ADDRESS
WL2866D	0x50H
ETS904	0x50H

LCM Bias

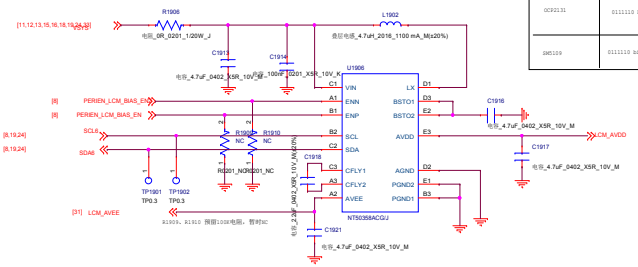

厂家	I2C ADDRESS
OCP2131	0111110 binary (or 3Eh)
SM5109	0111110 binary (or 3Eh)

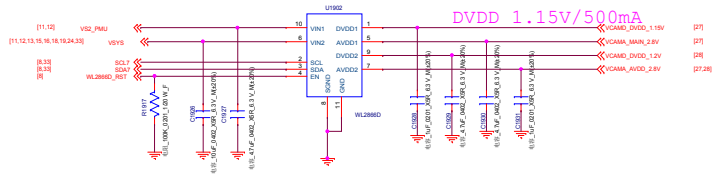

External VIO18_LDO: option for power leakage from UART port on product line

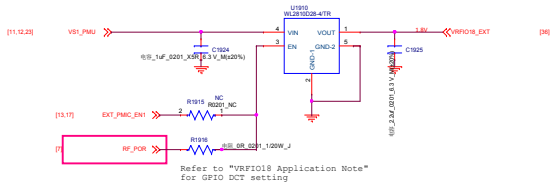

华勤通讯 Huaqin Telecom Technology Com.,Ltd		
Title 19.POWER_EXT		
Size D	Project <Doc>	Rev V1
Date: Tuesday, January 12, 2021	Sheet 19 of 48	

华勤通讯 Huaqin Telecom Technology Com.,Ltd		
Title	PM7250B_CHARGE/FG	
Size E	Project <Doc>	Rev V1
Date: Tuesday, January 12, 2021	Sheet 20 of 48	

华勤通讯 Huaqin Telecom Technology Com.,Ltd		
Title	PM7250B_MISC/GPIO/GND	
Size D	Project <Doc>	Rev V1
Date: Tuesday, January 12, 2021	Sheet 21 of 48	

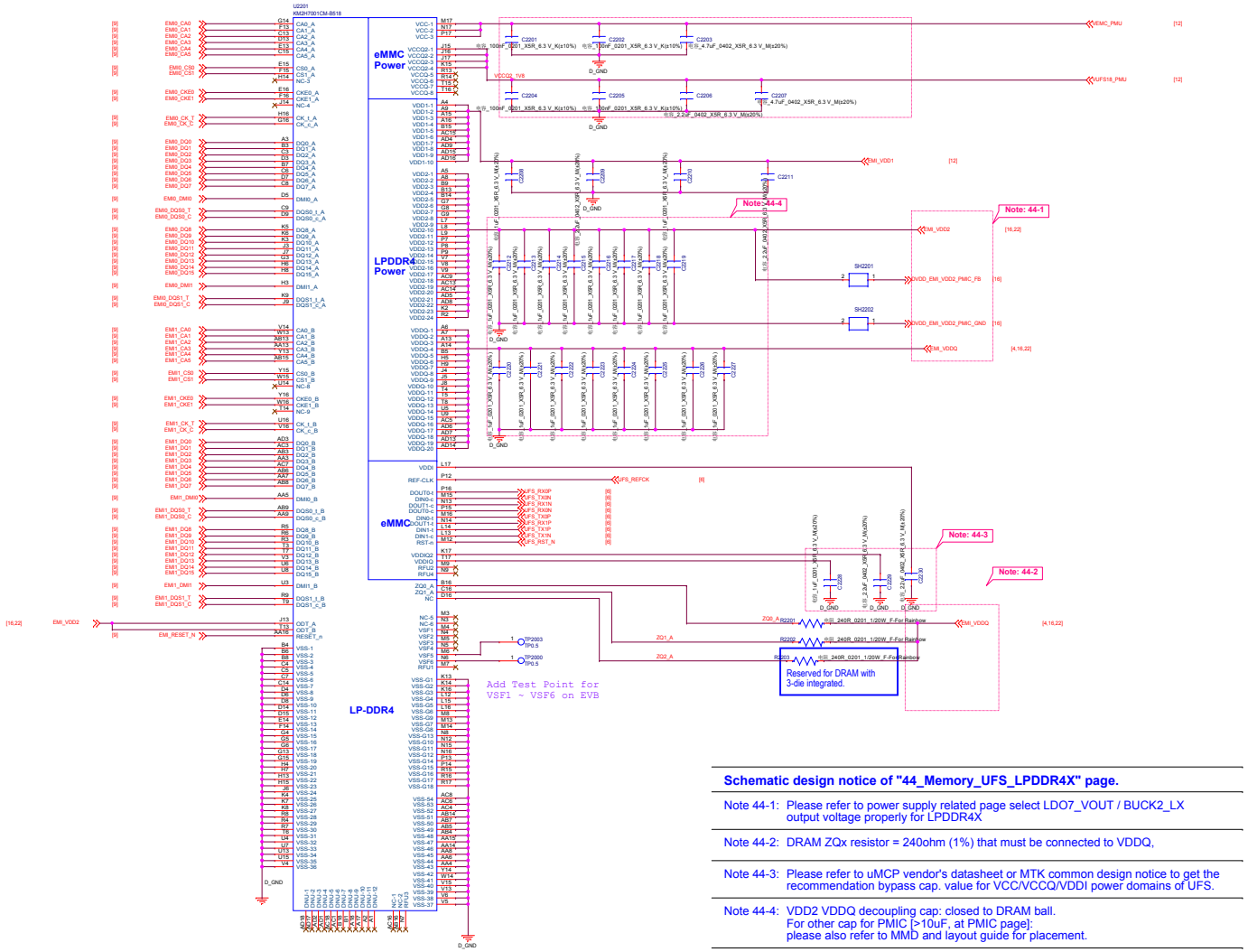

Schematic design notice of "44_Memory_UFS_LPDDR4X" page.

Note 44-1: Please refer to power supply related page select LDO7_VOUT / BUCK2_LX output voltage properly for LPDDR4X

Note 44-2: DRAM ZQx resistor = 240ohm (1%) that must be connected to VDDQ,

Note 44-3: Please refer to uMCP vendor's datasheet or MTK common design notice to get the recommendation bypass cap. value for VCC/VCCQ/VDDI power domains of UFS.

Note 44-4: VDD2 VDDQ decoupling cap: closed to DRAM ball.
For other cap for PMIC [>10uF, at PMIC page]:
please also refer to MMD and layout guide for placement.

华勤通讯 Huaqin Telecom Technology Com.,Ltd		
Title 22.Memory_UFS_LPDDR4X		
Size D	Project <Doc>	Rev V1
Date: Tuesday, January 12, 2021	Sheet 22 of 48	

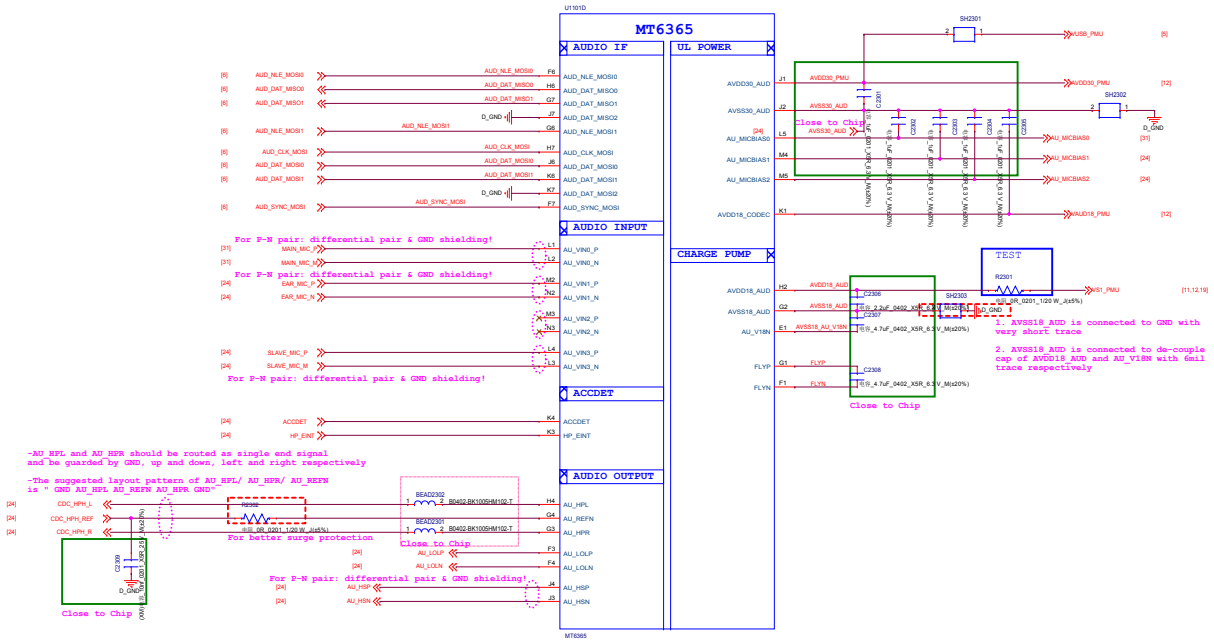

华勤通讯 Huaqin Telecom Technology Com.,Ltd		
Title	23.PERI_AUDIO_PMIC-IF	
Size D	Project <Doc>	Rev V1
Date: Tuesday, January 12, 2021	Sheet 23 of 48	

Earphone Microphone

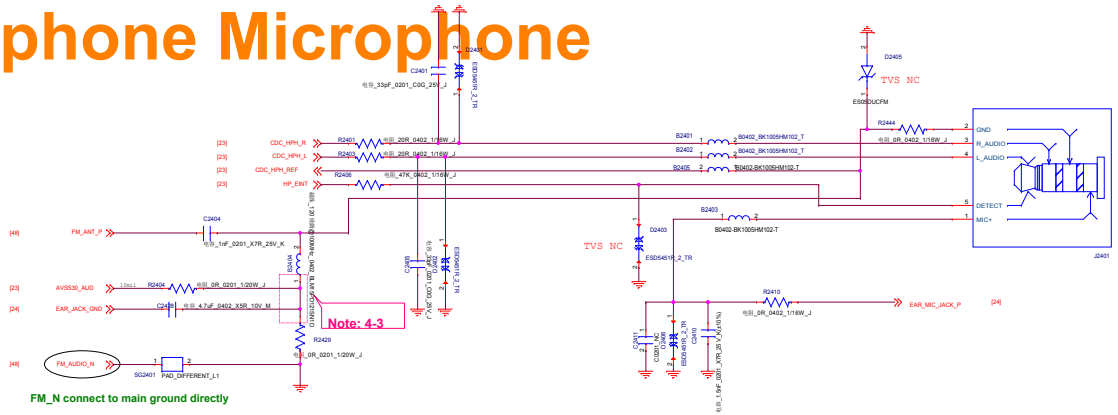

Earphone Microphone

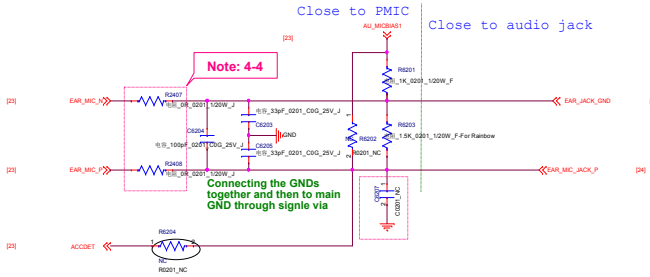

Note 4-3:

	Earphone Jack @ Main board	Earphone Jack @ Sub board
FA504_2	0 ohm	100nF

Note 4-4:

1. Need do SW configuration for DCC mode
2. Analog input impedance is as below, please customer check the detail requirement with mic vendor if the mic used has special requirement on the input impedance of analog input

MT6357	UL Mode	MIN	TYP	MAX	Unit
C	DCC	-	-	1p	F

RECIVER

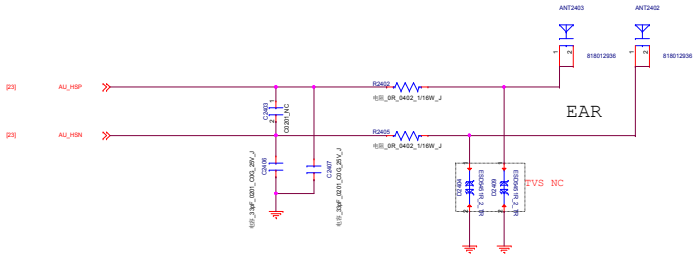

SPEAKER

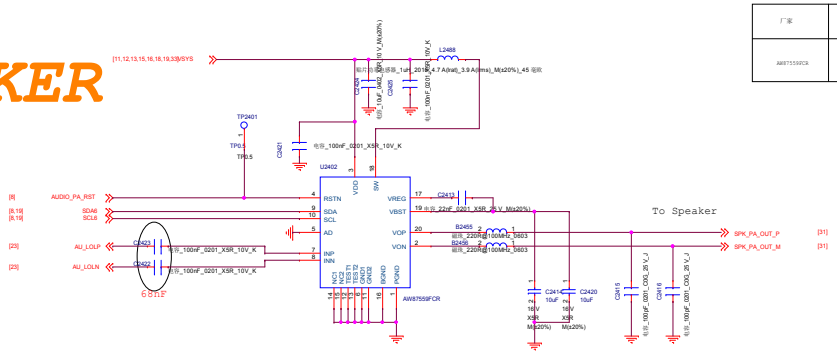

厂家	I2C ADDRESS
AW87559FCR	0X58(7 bit)

Slave MIC

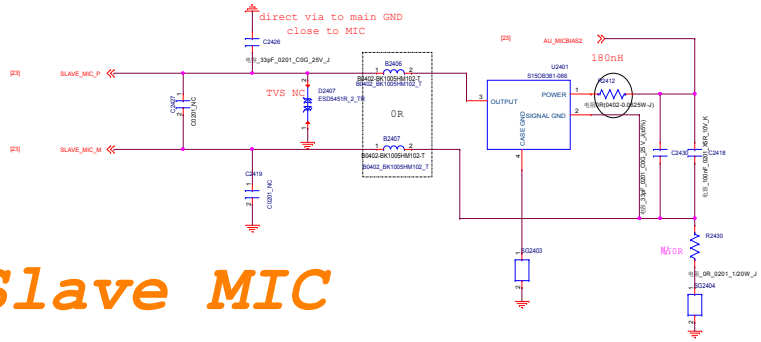

华勤通讯 Huaqin Telecom Technology Com.,Ltd		
Title	24.MIC/RCV/SPK/Earphone	
Size D	Project <Doc>	Rev V1
Date: Tuesday, January 19, 2021	Sheet 24 of 48	

eCOMPASS

M-Sensor

厂家	I2C ADDRESS
AKM9918C	0ch
QMC6308-TR	2ch

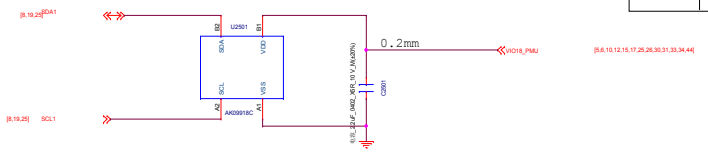

A+Gsensor

default SPI (if sensor hub support)

厂家	I2C ADDRESS
BMI220	
ICM-40607-A	

Gyro+A sensor

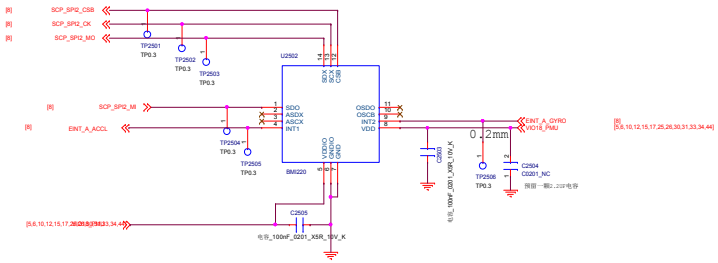

ALS+PS

厂家	I2C ADDRESS
STK33552	0x46

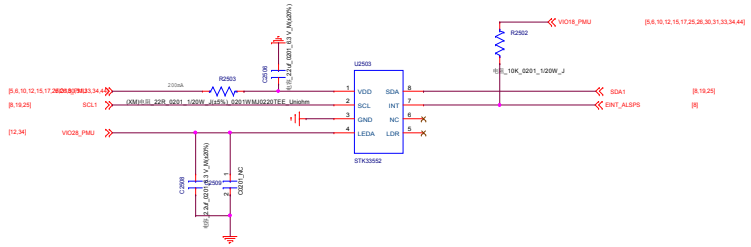

后光感 BU27030NUC

厂家	I2C ADDRESS
BU27030NUC	0x38

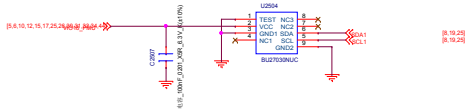

华勤通讯 Huaqin Telecom Technology Com.,Ltd		
Title	25.SENSOR	
Size D	Project <Doc>	Rev V1
Date: Tuesday, January 12, 2021	Sheet 25 of 48	

Finger Print

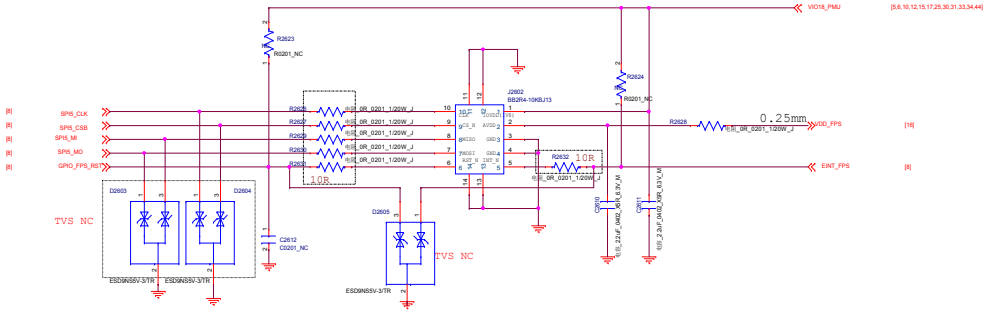

KEY BTB

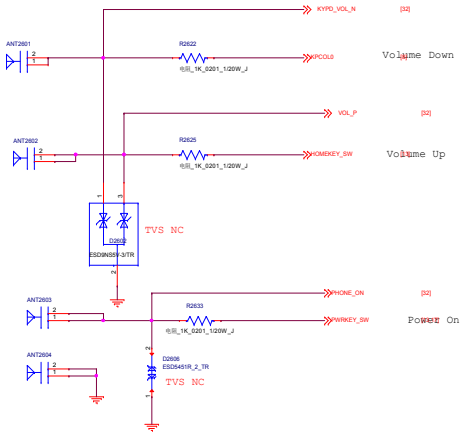

华勤通讯 Huaqin Telecom Technology Com.,Ltd		
Title 26.FP/KEY		
Size D	Project <Doc>	Rev V1
Date: Tuesday, January 12, 2021	Sheet 26 of 48	

注意：AGND AFGND都要单独下主地

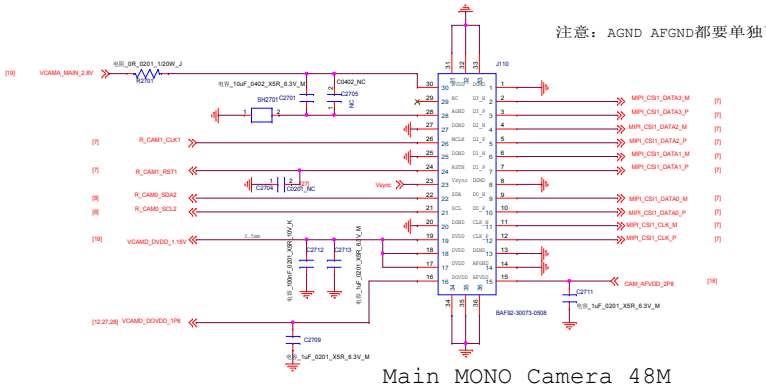

Main MONO Camera 48M

微 距 Camera 2M =Macro

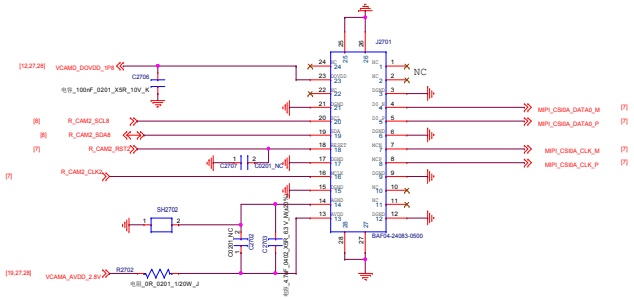

景 深 Camera 2M=Depth

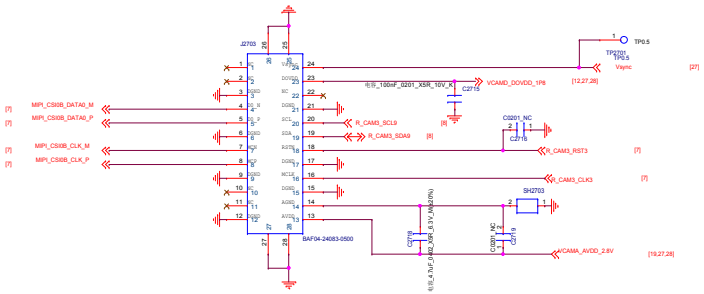

Flash LED 5V Boost

Flash下方地要完整且足够大，散热一定要好

华勤通讯 Huaqin Telecom Technology Com.,Ltd		
Title 27.REAR_CAM		
Size D	Project <Doc>	Rev V1
Date: Tuesday, January 12, 2021	Sheet 27 of 48	

Front Camera - 8M

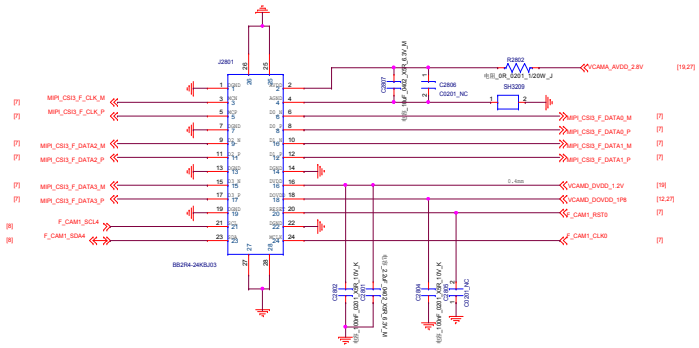

华勤通讯 Huaqin Telecom Technology Com.,Ltd		
Title 28.FRONT_CAM		
Size D	Project <Doc>	Rev V1
Date: Tuesday, January 12, 2021	Sheet 28 of 48	

华勤通讯 Huaqin Telecom Technology Com.,Ltd		
Title	Sub_Charger_SMB1396	
Size D	Project <Doc>	Rev V1
Date: Tuesday, January 12, 2021	Sheet 29 of 48	

3选2卡座

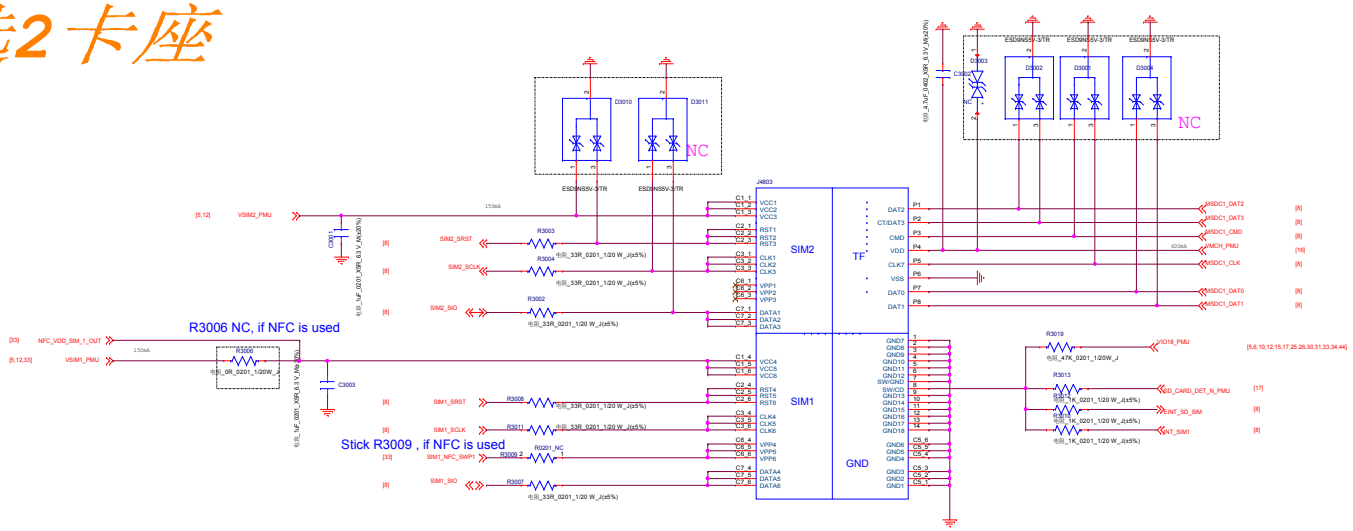

BATT CON

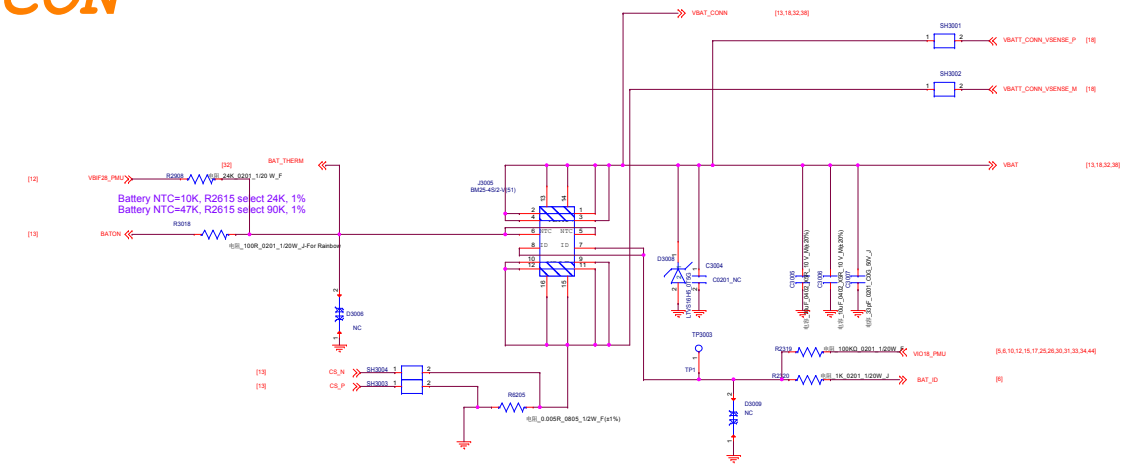

华勤通讯 Huaqin Telecom Technology Com.,Ltd		
Title	30.SIM/BATT	
Size D	Project <Doc>	Rev V1
Date: Tuesday, January 12, 2021	Sheet 30 of 48	

LINK

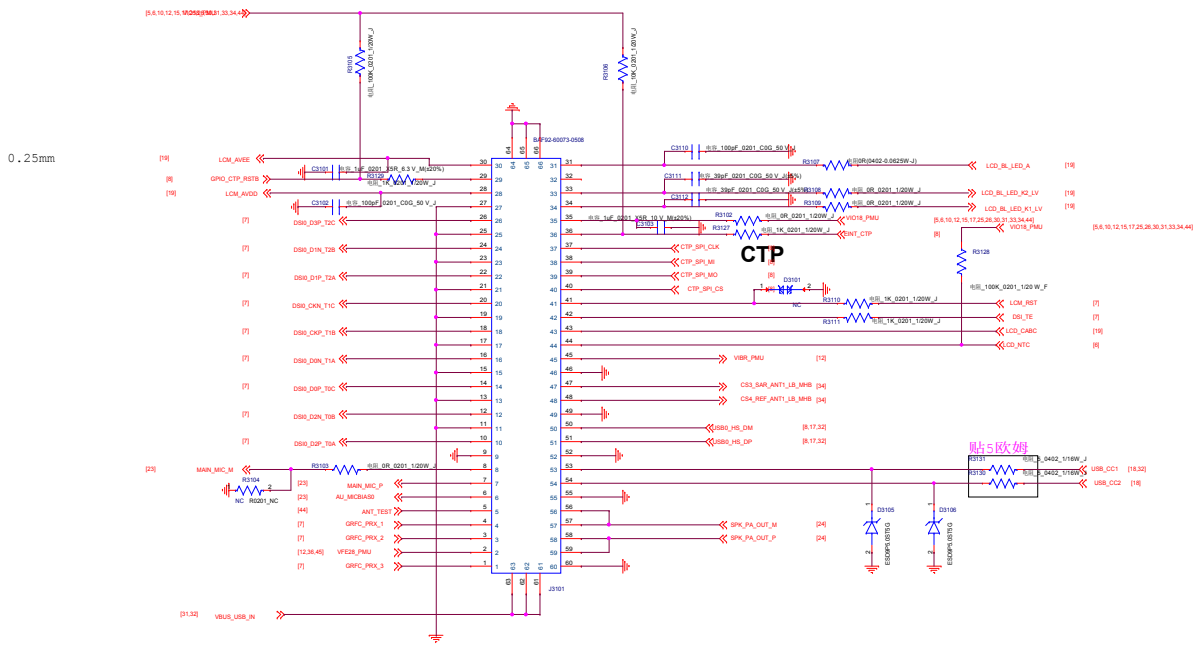

OVP

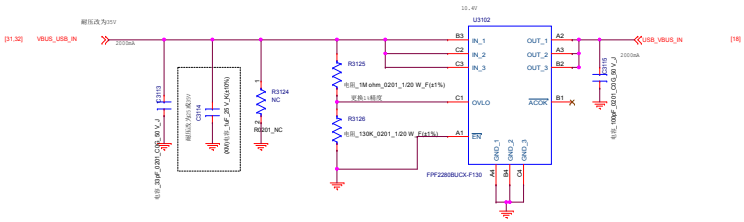

华勤通讯 Huaqin Telecom Technology Com.,Ltd		
Title	31.60PIN_LCD_LINK/OVP	
Size D	Project <Doc>	Rev V1
Date: Tuesday, January 12, 2021	Sheet 31 of 48	

VBAT TEST POINT

VBAT

KEY BTB

KEYPAD

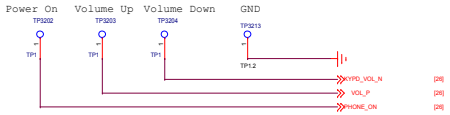

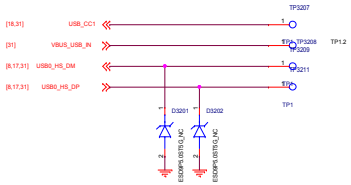

VCHG

UART TP

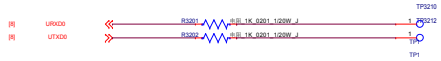

JTAG

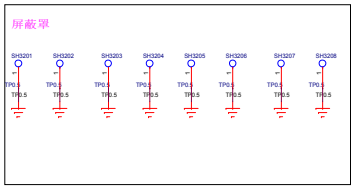

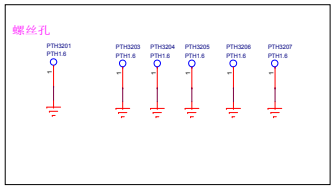

华勤通讯 Huaqin Telecom Technology Com.,Ltd		
Title 32.TEST_POINT/SHIELD		
Size D	Project <Doc>	Rev V1
Date: Tuesday, January 12, 2021	Sheet 32 of 50	

RF_NFC_not support

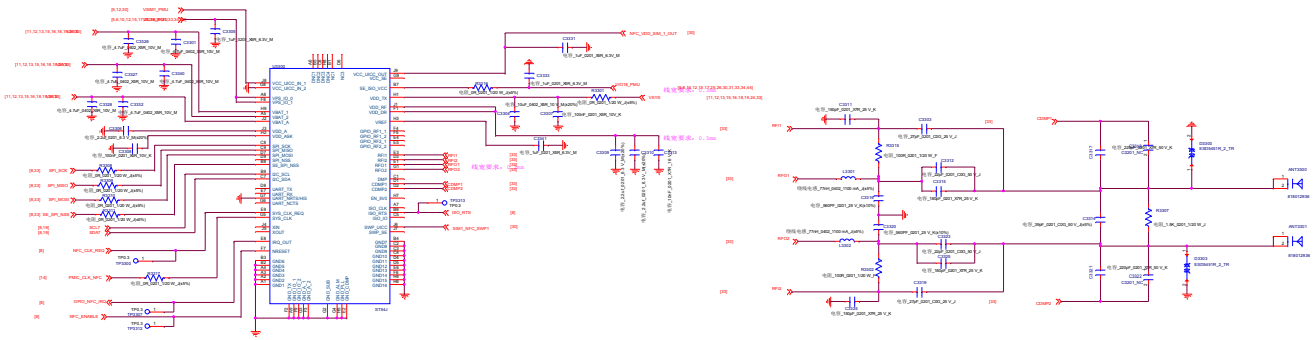

华勤通讯 Huaqin Telecom Technology Com.,Ltd		
Title RF_NFC		
Size E	Project <Doc>	Rev V1
Date: Tuesday, January 12, 2021	Sheet 33 of 48	

SAR_sensor Not support

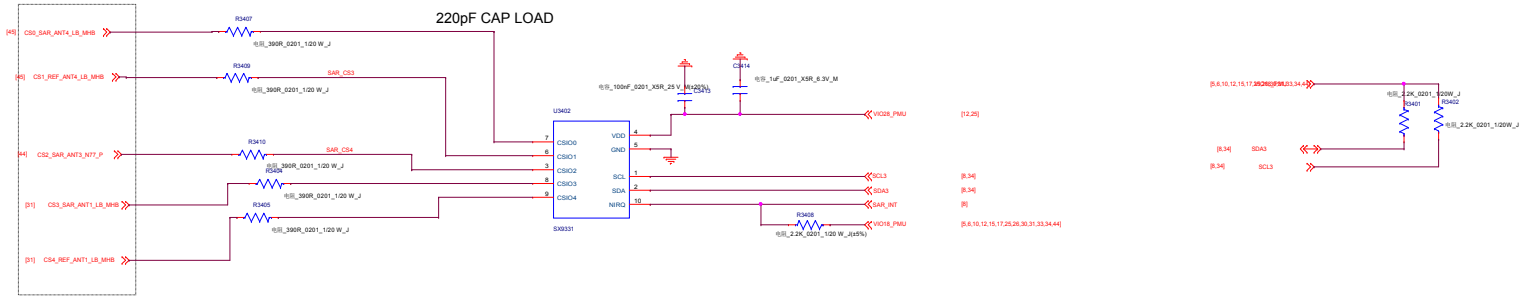

Design notice:
1) CS0_1 nets are differential pairs;
2) The width for each line,should be less than 0.1mm;
3) 0.2mm should be guaranteed between the ground and differential pairs;
4) And also, the distance between the differential line should be more than 0.2mm;
5) All the CSx nets should be protected by surrounding GND;

华勤通讯 Huaqin Telecom Technology Com.,Ltd		
Title SAR_sensor		
Size D	Project <Doc>	Rev V1
Date: Tuesday, January 12, 2021	Sheet 34 of 48	

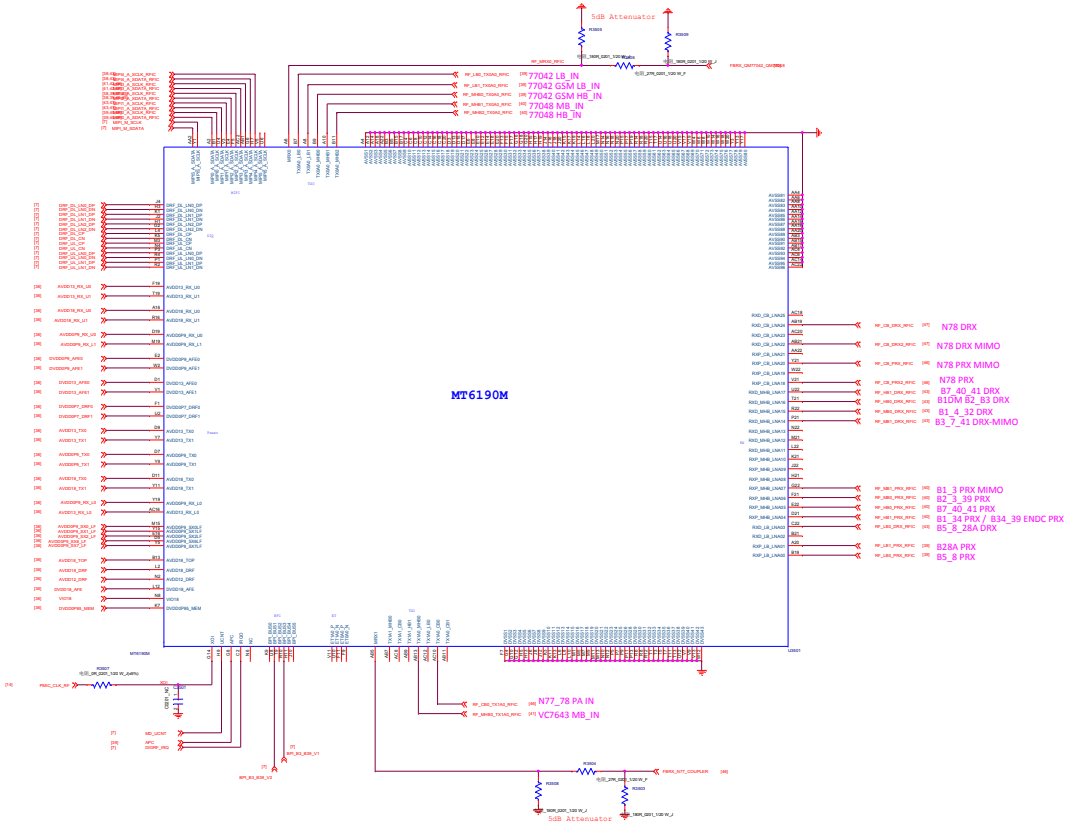

华勤通讯 Huaqin Telecom Technology Com.,Ltd		
Title: MT6190M_Port		
Size: E	Project: <Doc>	Rev: V1
Date: Tuesday, January 12, 2021	Sheet 35 of 48	

MT6190M_PWR

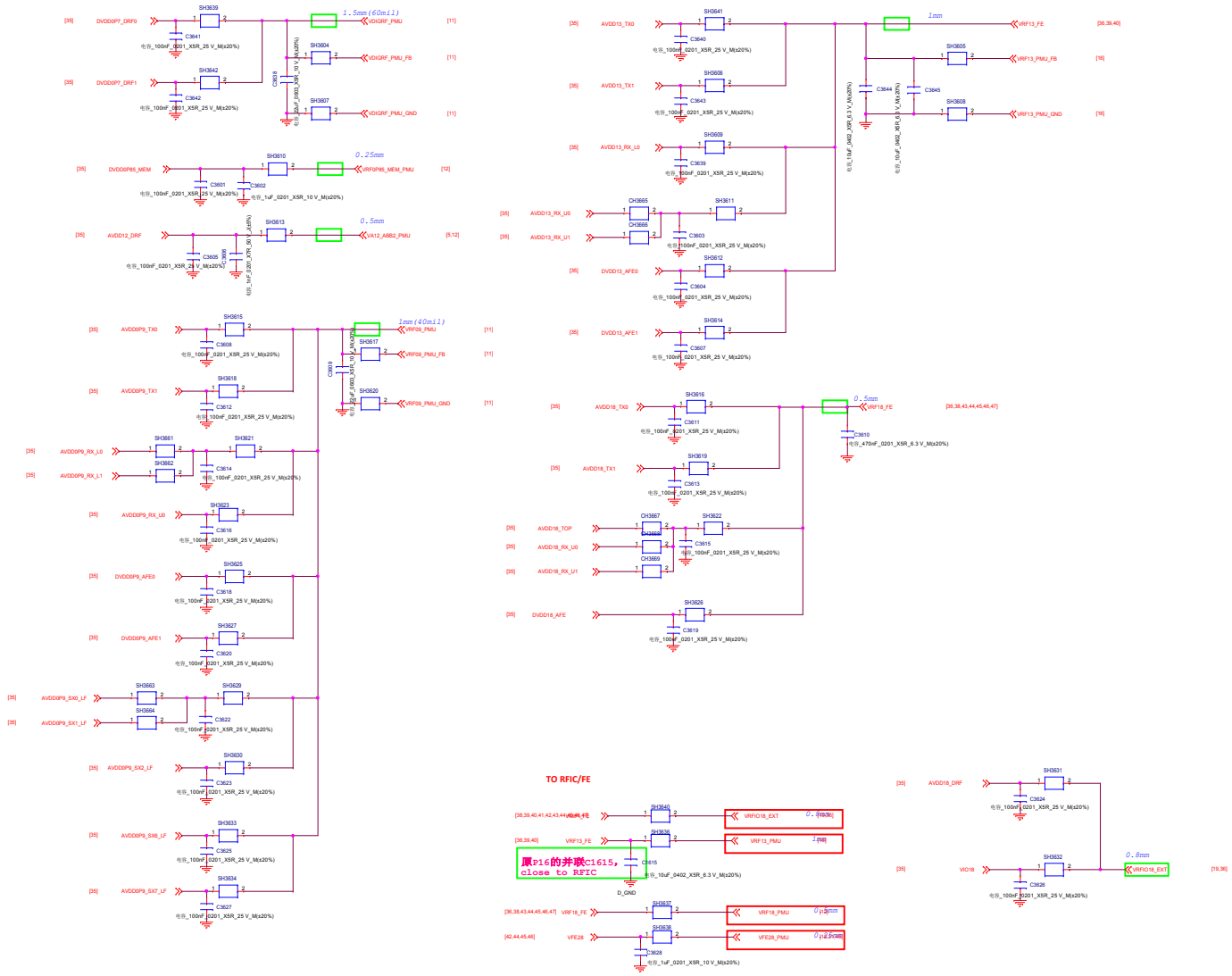

华勤通讯 Huaqin Telecom Technology Com.,Ltd		
Title MT6190M_PWR		
Size D	Project <Doc>	Rev V1
Date: Tuesday, January 12, 2021	Sheet 36 of 48	

华勤通讯 Huaqin Telecom Technology Com.,Ltd		
Title NC_FBRX		
Size D	Project <Doc>	Rev V1
Date: Tuesday, January 12, 2021	Sheet 37 of 48	

RF_APT

QM77042 and QM77048 for one APT

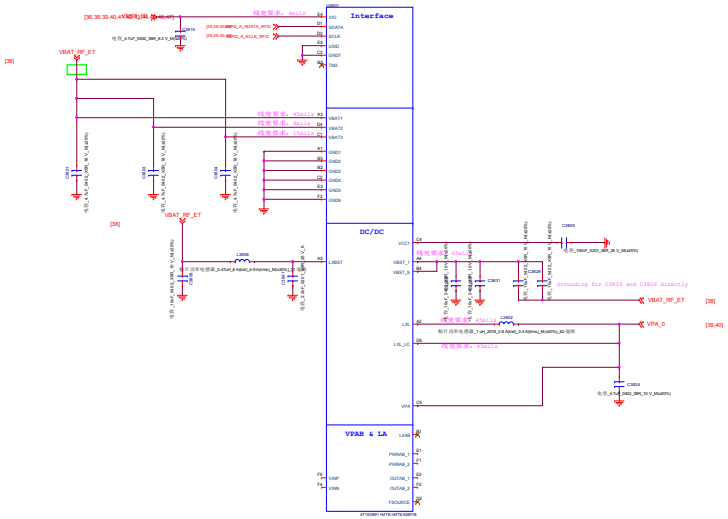

VC7643 and QM78200 for the other APT

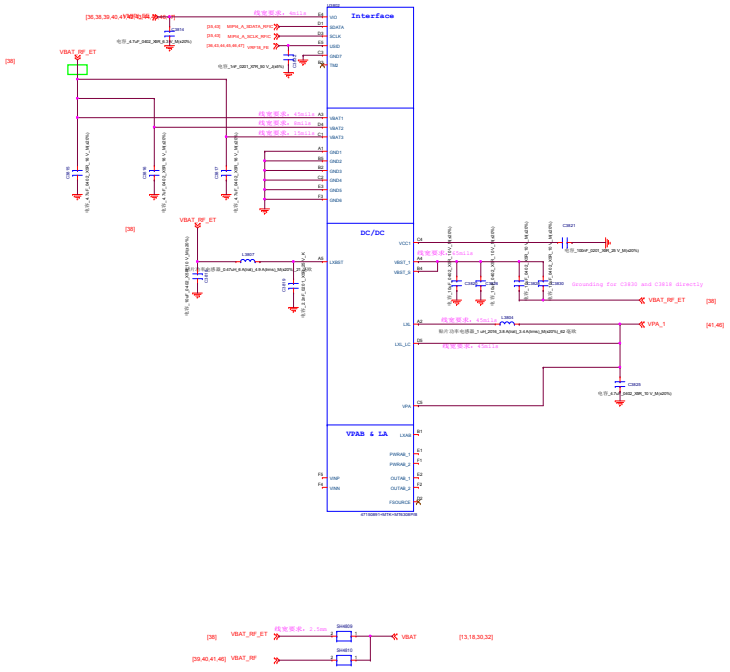

华勤通讯 Huaqin Telecom Technology Com.,Ltd		
Title RF_APT_MT6308M		
Size E	Project <Doc>	Rev V1
Date: Tuesday, January 12, 2021	Sheet 38 of 48	

2G_3G/4G/5G LB PA_QM77042

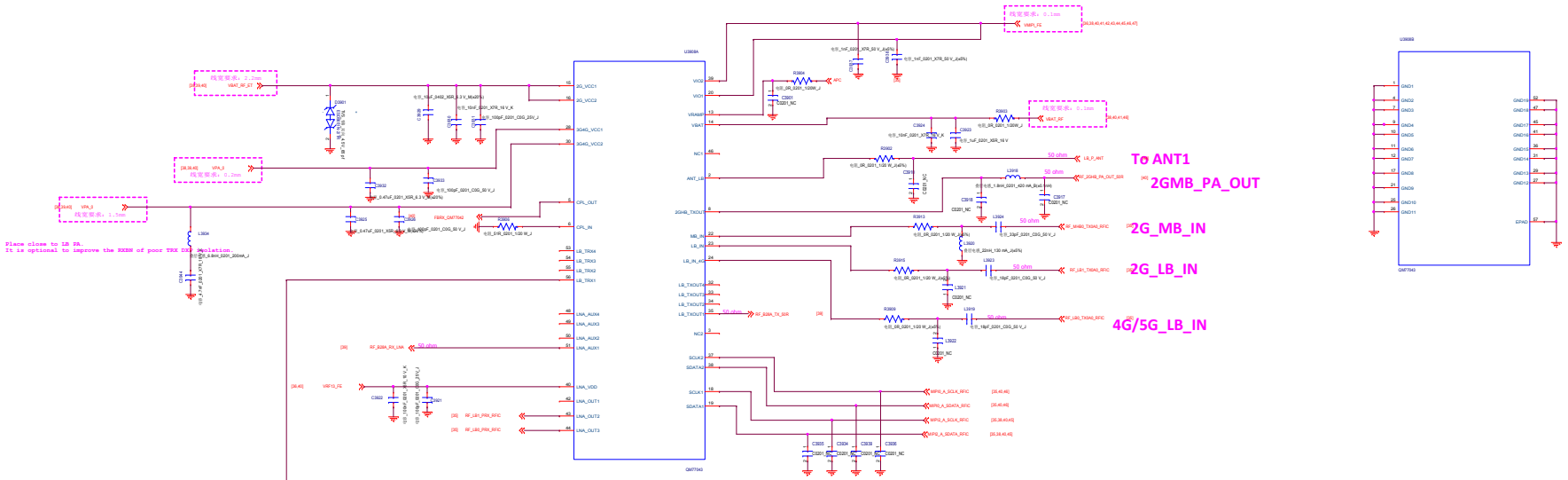

QM77042同QM77043 pin to pin

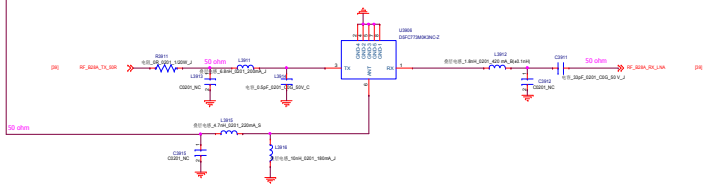

NTC温度检测
见P10的R1001 and NTC1001

华勤通讯 Huaqin Telecom Technology Com.,Ltd		
Title QM77042		
Size A0	Project <Doc>	Rev V1
Date: Tuesday, January 12, 2021	Sheet 39 of 48	

4G/5G MHB PA_QM77048E

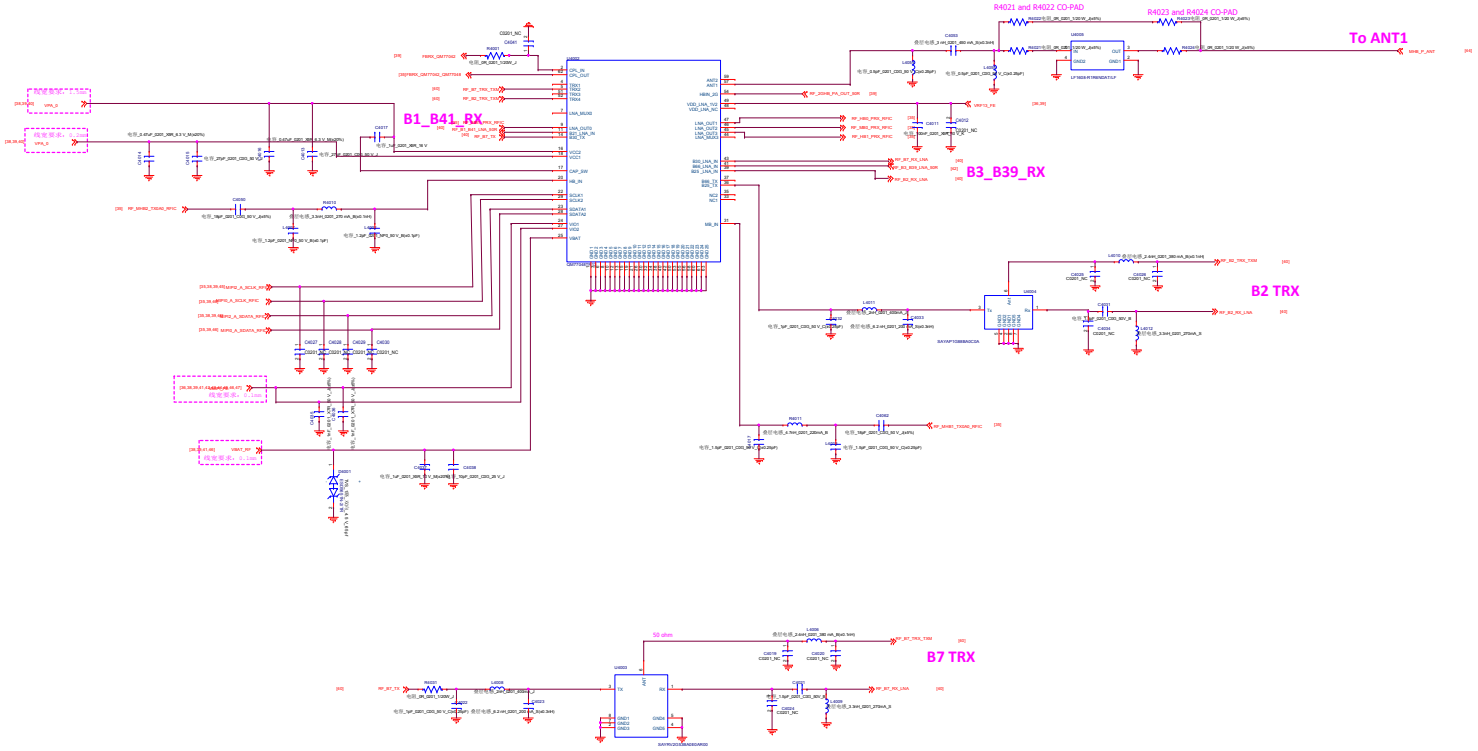

NTC温度检测
见P10的R1002 and NTC1002

华勤通讯 Huaqin Telecom Technology Com.,Ltd		
Title QM77048E		
Size E	Project <Doc>	Rev V1
Date: Tuesday, January 12, 2021	Sheet 40 of 48	

MMMB PA_MB ENDC

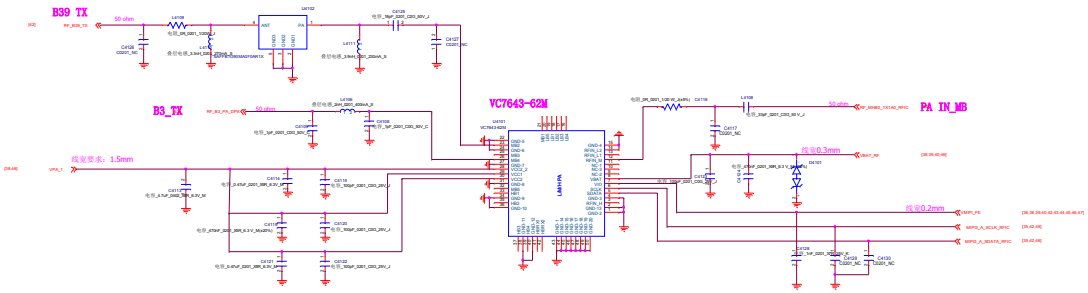

华勤通讯 Huaqin Telecom Technology Com.,Ltd		
Title MMMB PA_MB ENDC		
Size E	Project <Doc>	Rev V1
Date: Tuesday, January 12, 2021	Sheet 41 of 48	

MMMB PA_VC7643_ENDC_MHB_TRX

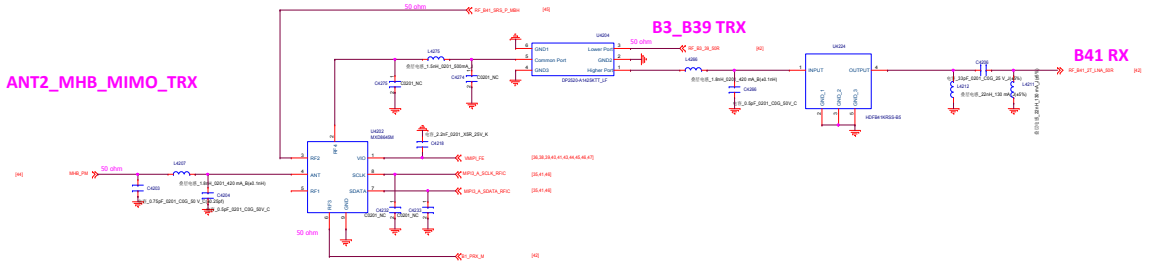

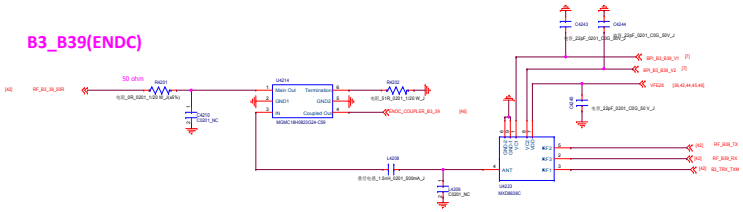

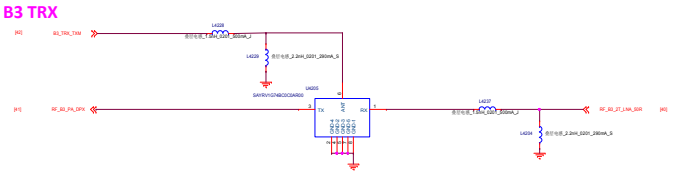

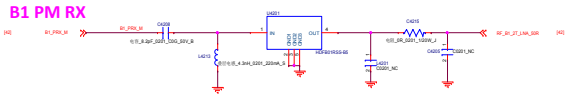

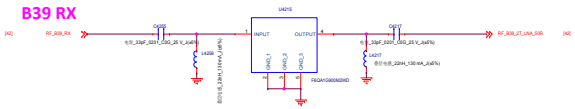

华勤通讯 Huaqin Telecom Technology Com.,Ltd		
Title MMMB PA_VC7643_ENDC_MHB_TRX		
Size A0	Project <Doc>	Rev V1
Date: Tuesday, January 12, 2021	Sheet 42 of 48	

DRX_MXD98E2DA+MXD83K5A

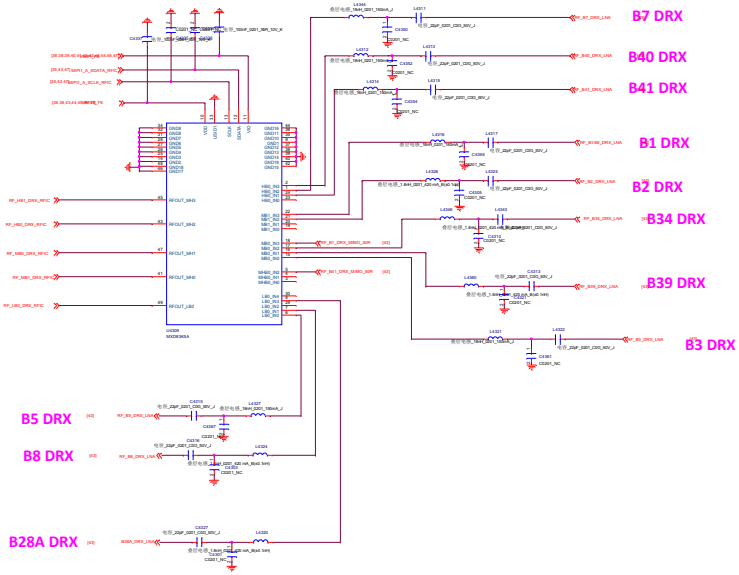

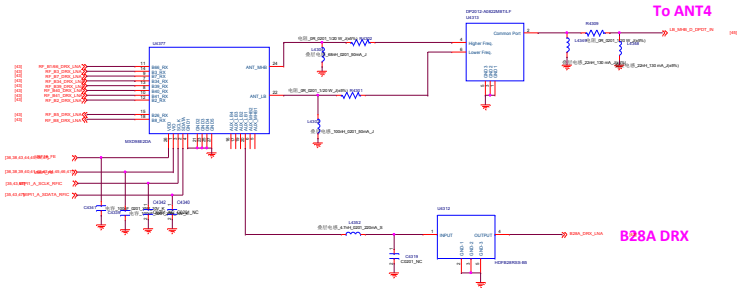

DRX_MIMO

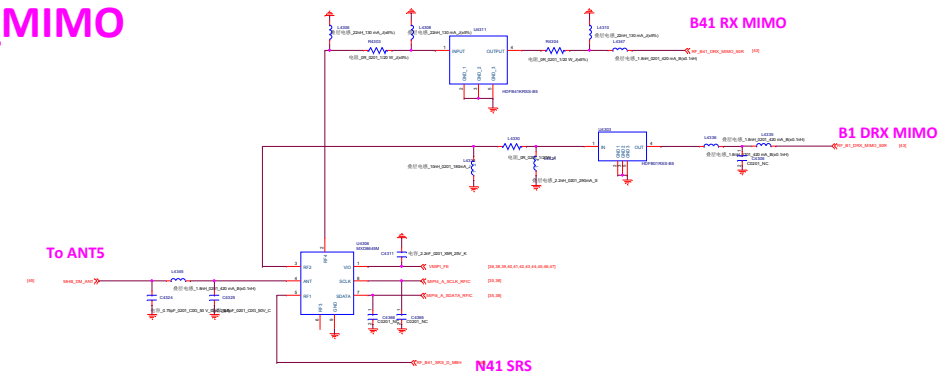

华勤通讯 Huaqin Telecom Technology Com.,Ltd		
Title MXD98E2DA_MXD83K5A		
Size E	Project <Doc>	Rev V1
Date: Tuesday, January 12, 2021	Sheet 43 of 48	

ANT1（LB_MHB_P）to 小板

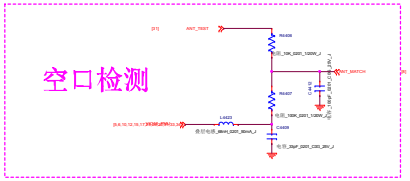

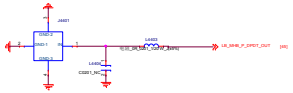

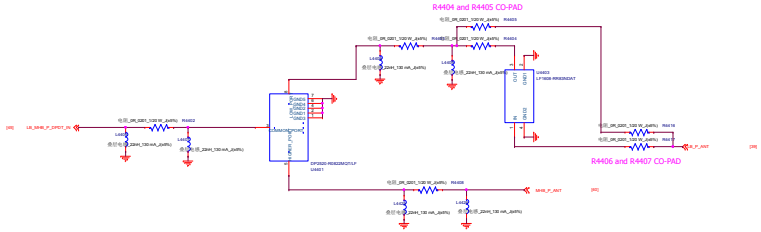

ANT2（MHB_PM/N77_TRX）

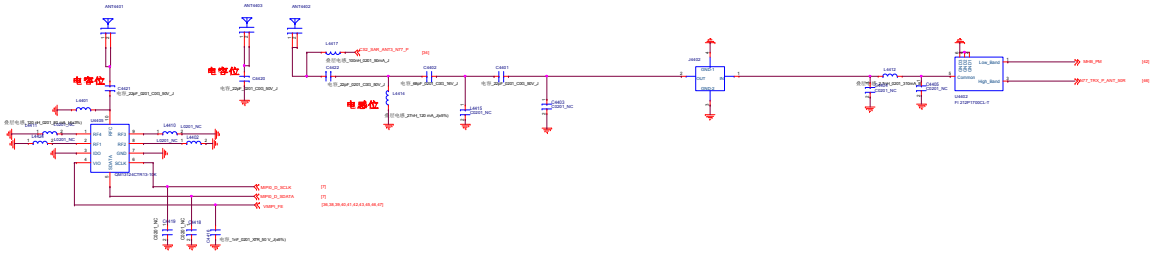

ANT3（N77_PM）

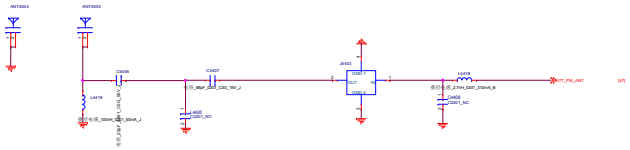

华勤通讯 Huaqin Telecom Technology Com.,Ltd		
Title ANT_P_PM		
Size E	Project <Doc>	Rev V1
Date: Tuesday, January 12, 2021	Sheet 44 of 48	

ANT4（LB_MHB_D）

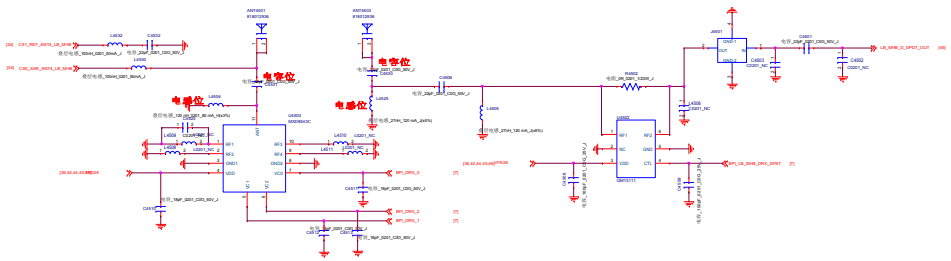

AsDIV_2P4T

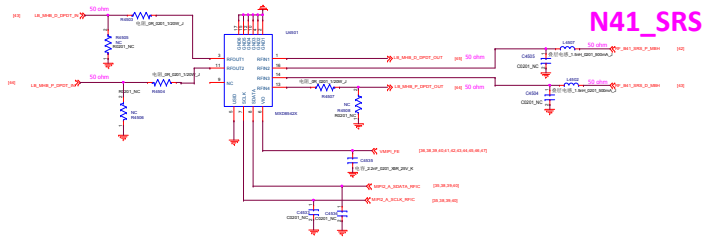

ANT5（MHB_DM/N77_D）

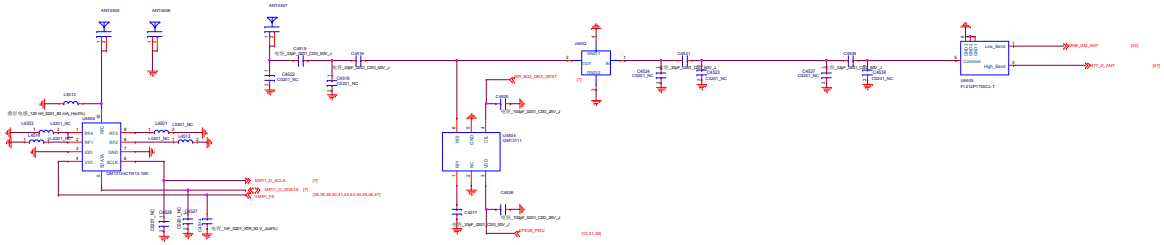

ANT6（N77_DM）to 小板

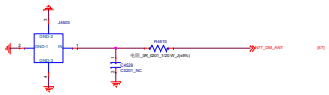

接地弹片

华勤通讯 Huaqin Telecom Technology Com.,Ltd		
Title ANT_D_DM		
Size E	Project <Doc>	Rev V1
Date: Tuesday, January 12, 2021	Sheet 45 of 48	

N77/78_TRX0_QM78207

NTC温度检测
见P10的R1002 and NTC1002

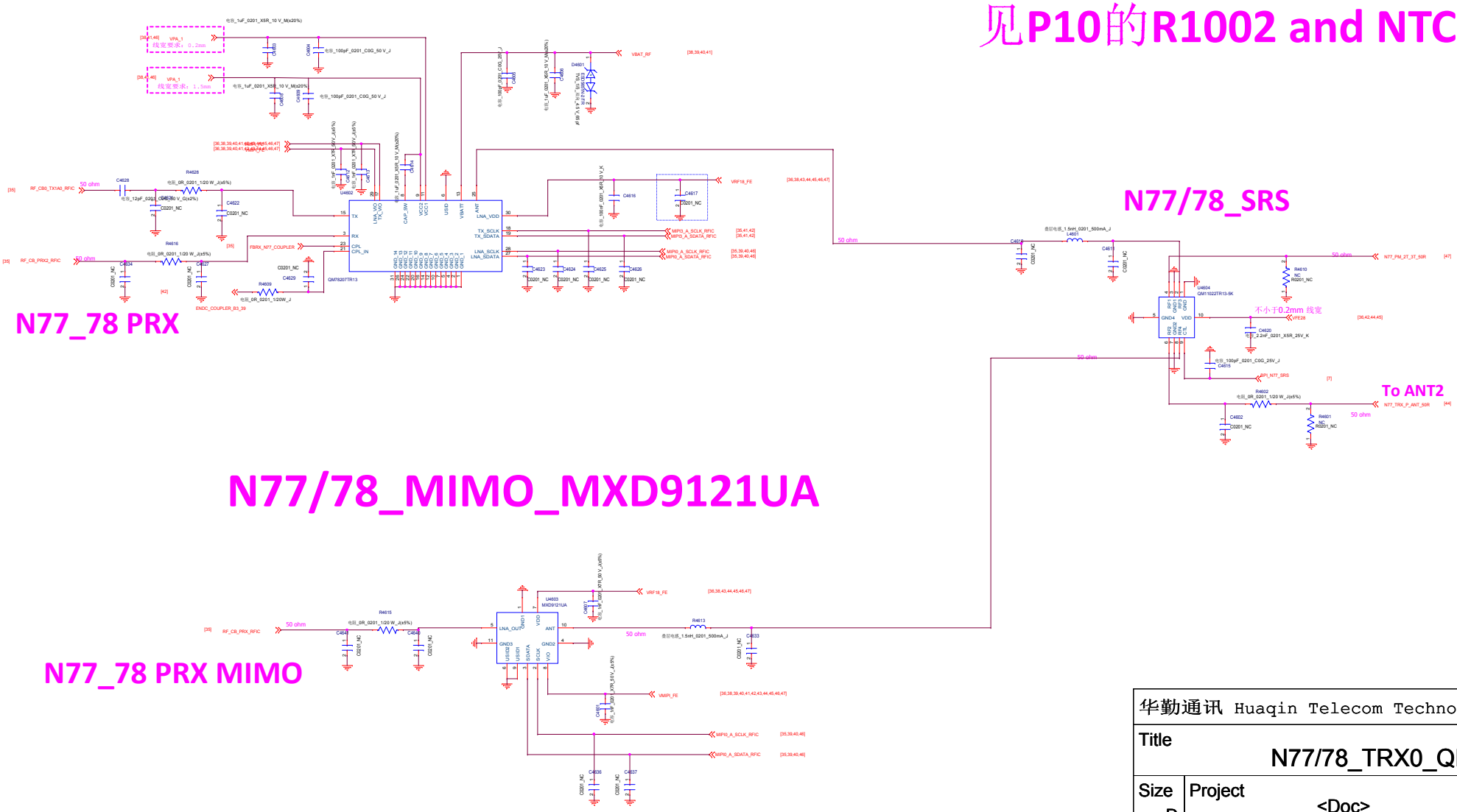

华勤通讯 Huaqin Telecom Technology Com.,Ltd		
Title	N77/78_TRX0_QM78207	
Size D	Project <Doc>	Rev V1
Date: Tuesday, January 12, 2021	Sheet 46 of 48	

N77/78_DRX_MXD9121UA

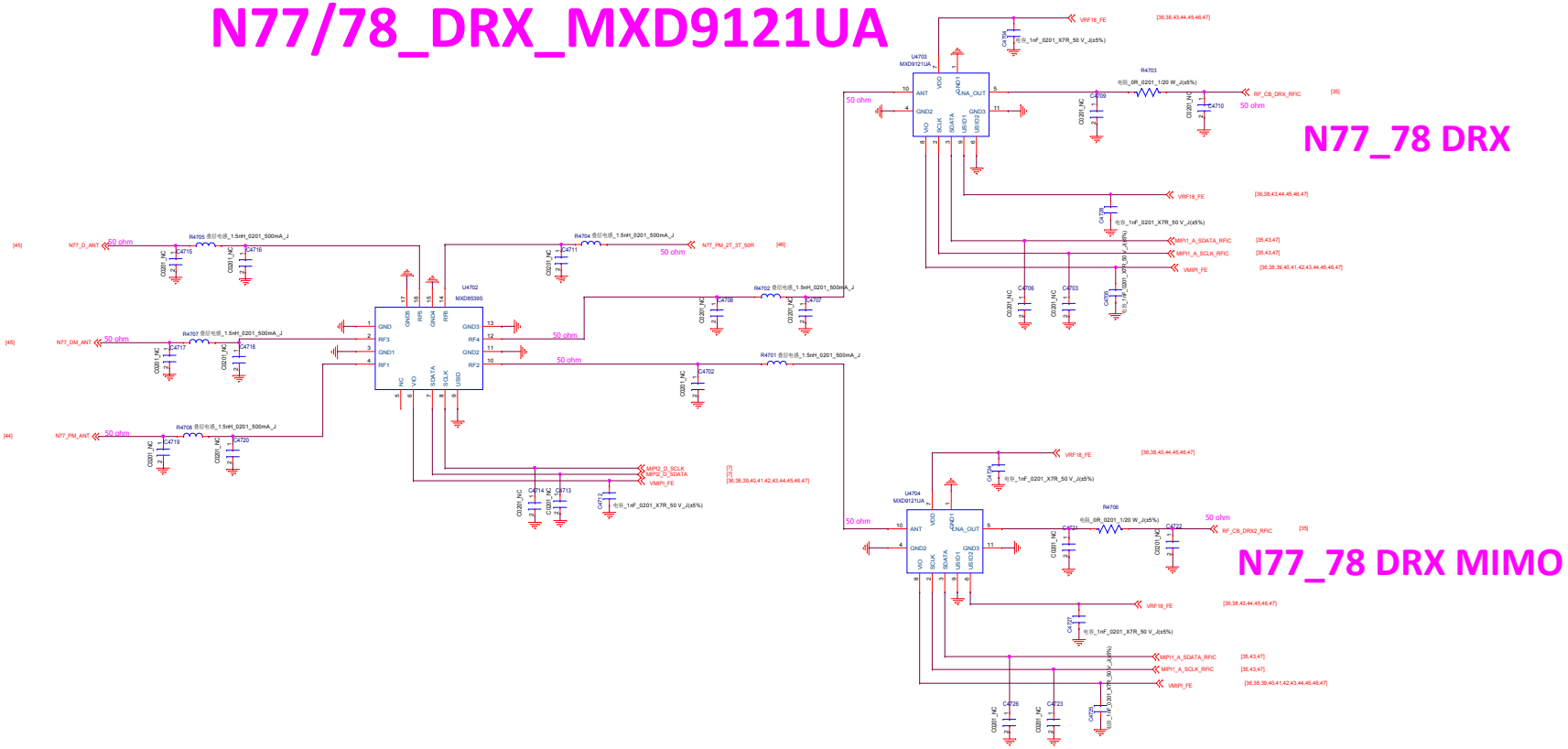

华勤通讯 Huaqin Telecom Technology Com.,Ltd		
Title N77/78_DRX_MXD9121UA		
Size D	Project <Doc>	Rev V1
Date: Tuesday, January 12, 2021	Sheet 47 of 48	

ANT7
WiFi 2.4G & 5G_GPS

MT6631

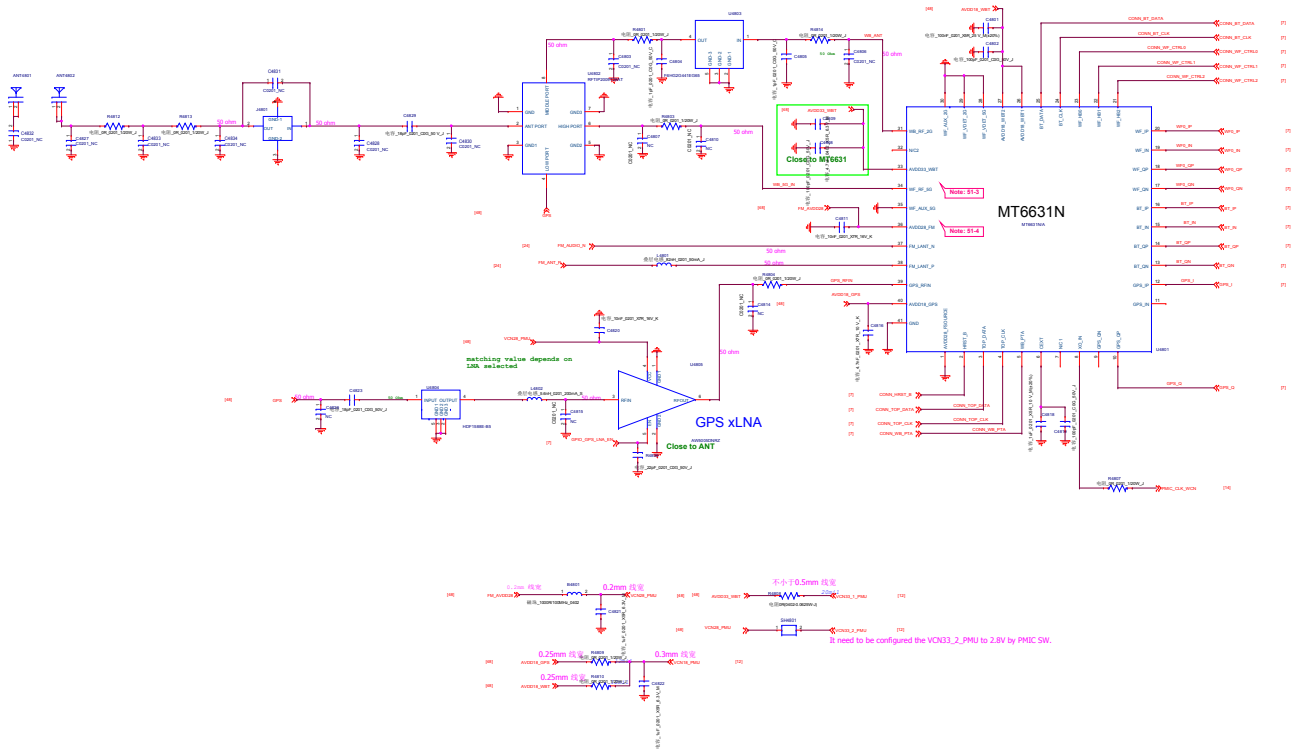

Schematic design notice of "51_CONNECTIVITY_CONSYS_MT6631"

Note 51-1:	For R5015 size, please select 0402 size or larger one
Note 51-2:	Please refer to MT6765 Baseband design notice for VCN33 LDO selection guide
Note 51-3:	If WiFi 5G not support, connect pin 34(WF_RF_5G) to GND
Note 51-4:	Pin 36 (AVDD28_FM) must be connected to VCN28 even if FM not support

华勤通讯 Huaqin Telecom Technology Com.,Ltd		
Title: MT6631		
Size: E	Project: <Doc>	Rev: V1
Date: Tuesday, January 12, 2021	Sheet 48 of 48	